Advance to the future...
Chosun Refractories

Chosun Refractories

products

- Blast Furnace & Finex
- Stack Gunning & Hot Stove
- Cast House & Torpedo Ladle Car
- Charging Ladle & Converter
- Electric arc Furnace & Teeming Ladle
- Tundish & Reheating Furnace
- Cement Plant & Glass Melting Tank
- Incinerator & Fluidized-Bed-Combustor
- Nonferrous Metal Furnace & Ladle Flow Control Refractory
- Ladle Slide Gate Refractory & Ladle Ar Purging Plug
- Perfect Sealing Material & Ladle Shroud
- Tundish Flow Control Refractory & Tundish Slide Gate Refractory
- Tundish Stopper System Refractory & Tundish Stopper System Refractory
- Thin Slab Casting & Refractory & Temperature Measuring Tube
- Ladle Slide Gate System(EG) & Tundish Slide Gate System(AZC)
- Tundish Slide Gate with Tube Changer(P-AQC) & Stopper with Tube Changer(SSC-80)
- Tundish Nozzle Changer(ONQC) & Ladle Purging Plug Closer(SPC)
- High Alumina Bricks
- Fireclay Bricks
- Zircon Bricks & High Silica Bricks
- Magnesia & Magnesia-Chrome Bricks
- Alumina Silicon Carbide Bricks
- Silicon Carbide Bricks
- Carbon Containing Bricks
- Acid Proof Bricks
- Insulating Fire Bricks
- Castables
- Pre-Cast Block & Ramming & Gunning Mix
- Plastic Refractories
- Insulating Castable
- Blast Furnace Tap-Hole Clay (Mud) & Frame-Gunning Materials
- Mortar
- Ladle Slide Gate Refractory (Nozzle)
- Ladle Slide Gate Refractory (Plate)
- Continuous Casting Nozzles & Tube
- Purging Plugs & DPP · MHP

Blast Furnace

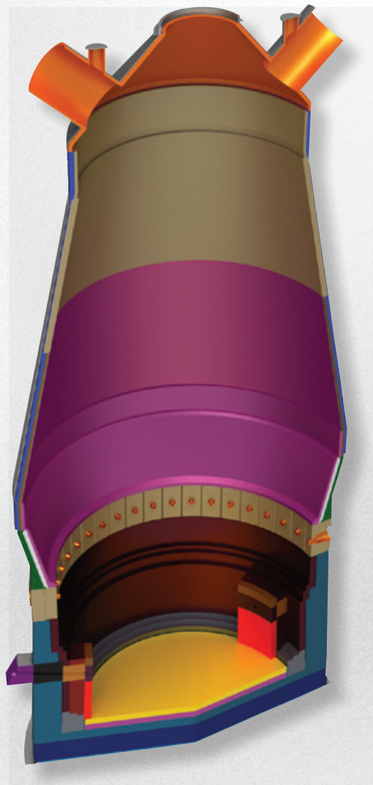

- SIL-C, Cast in brick
- SSB-2 , Insert brick
- SSB-2, FN-1
- UF-WBA, RBAL-15, SBAN-1
- METEOR-90HSF
- MUL-1
- UF-RBA
- FN-1
- SC-50S, NC-6BS
- SFI-A60
- CAB-RAM1
- CAB-RAMP
- SC-AS80, UL-SiC

Stave

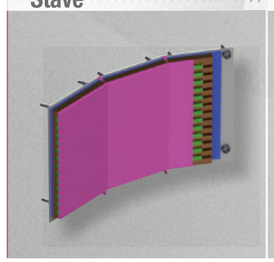

Cooling Plate

Tuyere

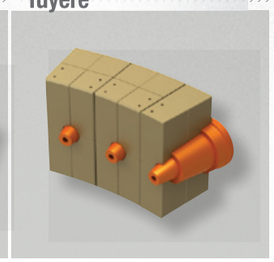

Taphole

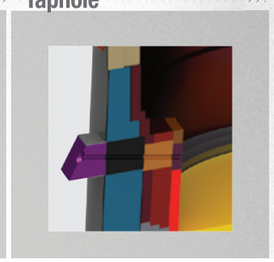

Finex

Melter Gasifier

- SIL-C, Cast in brick
- SSB-2 , Insert brick
- SSB-2, FN-1
- UF-WBA, RBAL-15, SBAN-1
- METEOR-90HSF
- MUL-1
- UF-RBA
- SC-50S, NC-6BS
- SFI-A60
- CAB-RAM1

Reactor

- SF-35
- CZ-1
- UCS-DC10
- UCS-HB90G
- UCS-DC10

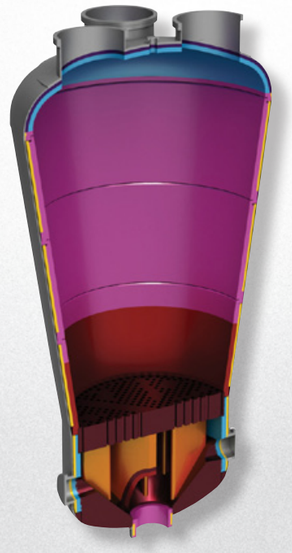

Stack Gunning

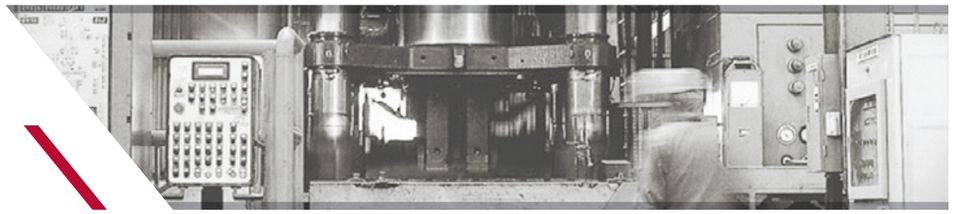

After Cleaning

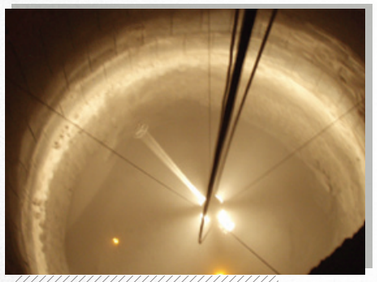

After Repair

Marterial	Brand
Stack Gunning Dimension	SC-A60S
	BF-SG

	Description
Brand	CR-K1
Dimension	2,200X4,000X2,370mm
Castable out Max.	13m^3/h
Electric power	AC 440V 60Hz

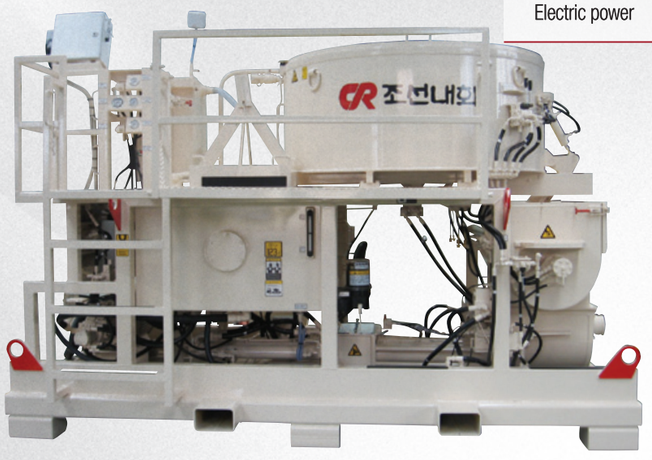

Hot Stove

External Type

Internal Type

- SP-34F
- SP-35F
- SP-26F
- HS-1
- SP-21
- LW-24, LW-30
- MUL-75
- SP-21H
- SHP-2
- HN-41
- ADC-58

Cast House

Main Runner

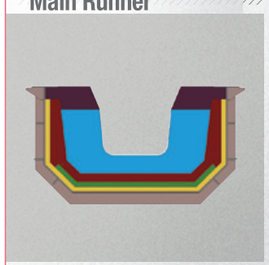

Slag Runner

Iron Runner

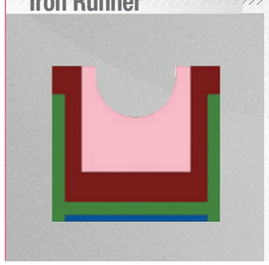

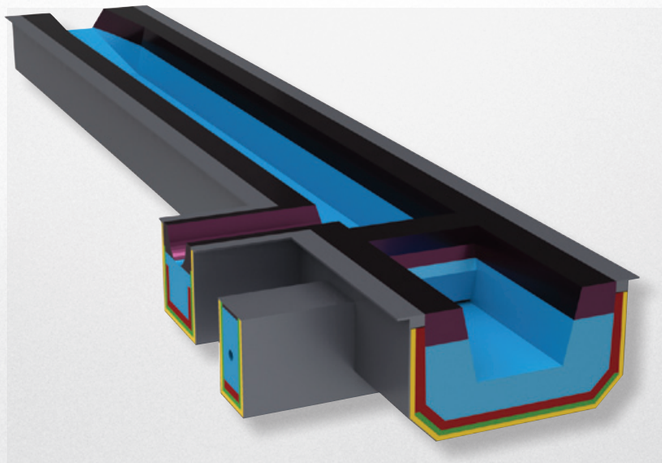

- SSB-2, AS-1
- H-1, N3-1, B-5
- GTR-AU3, GTR-AU3S, GRSP-S
- GTR-AU1, GRSP-M
- GSC-BL
- GTR-SR
- GIR

Torpedo Ladle Car

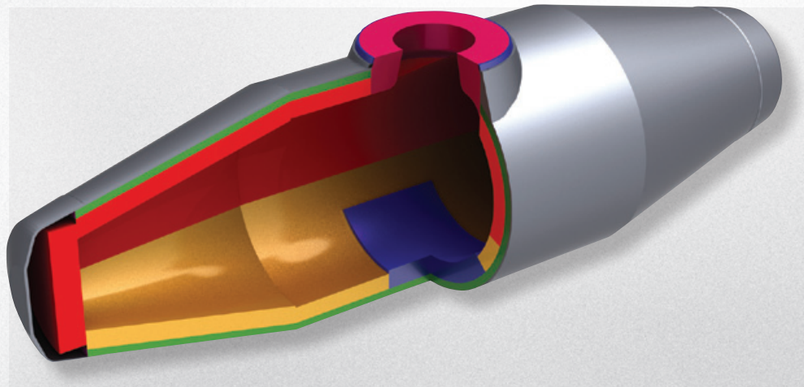

- ALSICA-AX2 , ALSICA-S1 , ALSICA-S2 , ALSICA-2
- ALSICA-AX1 , ALSICA-S1 , ALSICA-S2
- ALSICA-AX1 , ALSICA-2
- ALSICA-S2
- N3-1
- PCB-A75 , TCH-165SY

Charging Ladle

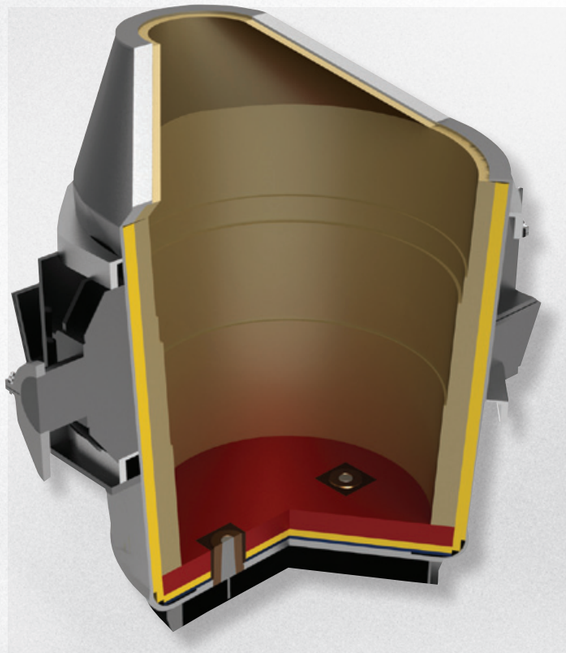

- TA-60 , ACPR-W
- ALSICA-T8
- LB
- SB-AC
- HACT-165 , MMCT-95
- NCT-90SP

Purging Plug

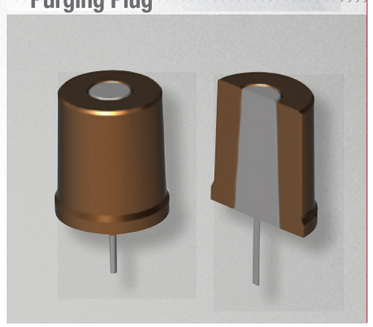

Converter

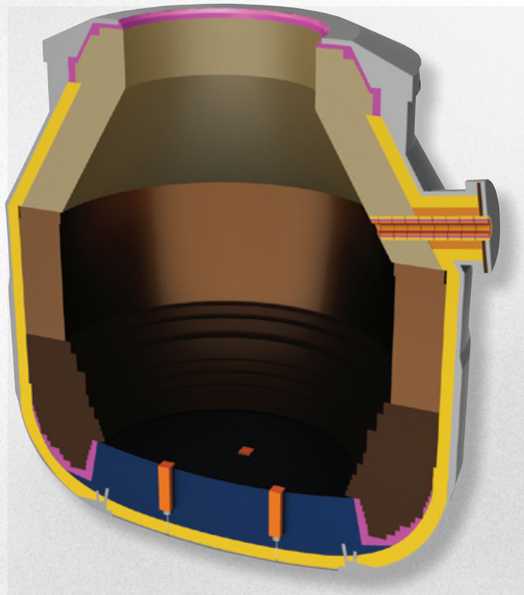

- UMC-2, UMC-3, UMC-4
- UMC-2, UMC-3, UMC-4
- UMC-3, UMC-4, UMC-5
- UMC-1, UMC-2, UMC-3, UMC-4, UMC-5
- UMC-4, UMC-5, UMC-6, UMC-7
- FMB-1, FMB-2
- CMP-N1
- MAGCAST 95
- MAGCAST 95

Taphole Sleeve

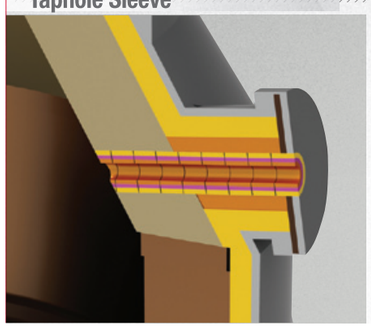

Multi Hole Plug

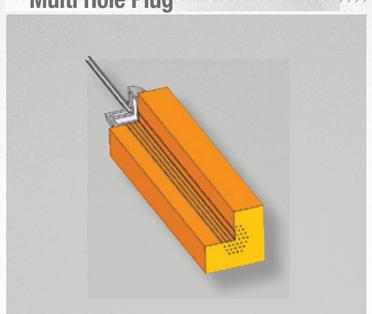

Electric Arc Furnace

EBT Type

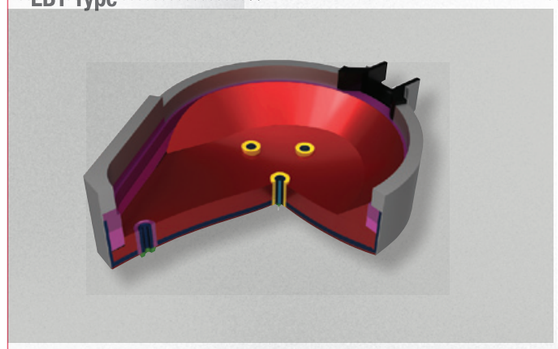

Spout Type

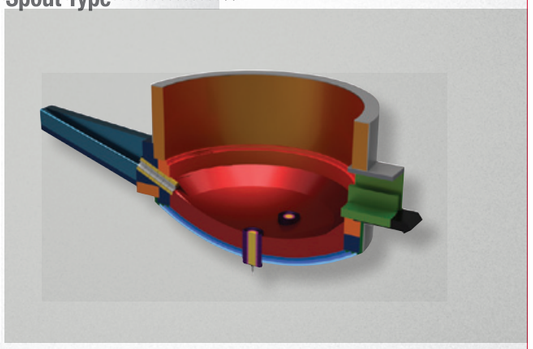

Tap Hole

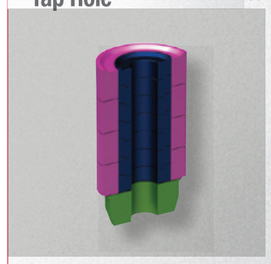

Direct Purging Plug

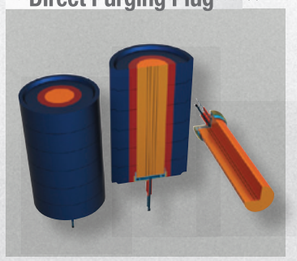

- FMB-1, FMB-2
- UMC-4, UMC-5
- ASC-15EB
- UMC-1, UMC-2, UMC-3
- UMC-4, UMC-5, UMC-6
- FMB-1, FMB-2
- MAGCAST 95
- UMC-4, UMC-5, UMC-6
- UMC-1, UMC-2, UMC-3
- FMB-1, FMB-2
- EDPP-N1
- EDPS-N1
- VPB-AS80
- UMC-4, UMC-5, ASC-15EB
- MAGCAST 95

Teeming Ladle

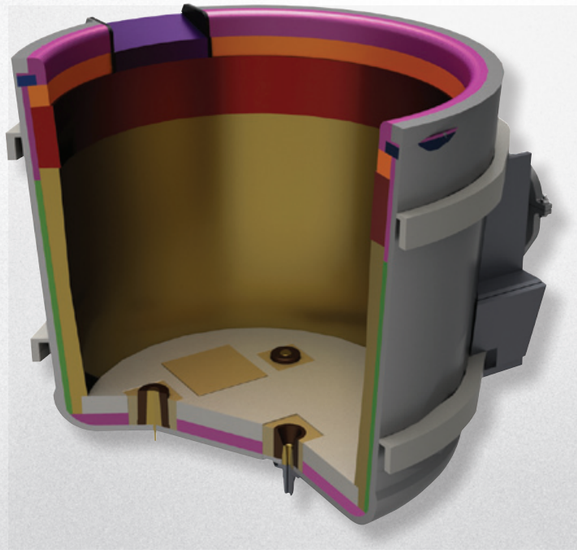

- UMC-3
- UMC-4
- H-2, LB
- CTL-BCB, VIB
- VPB, UNS
- UC-1, UC-2, UC-3
- UC-B, UC-4
- MMCT-95
- CTL-ASP-N
- HACT-165

Well Block

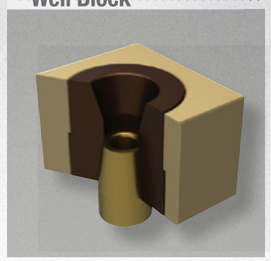

Purging Plug

Tundish

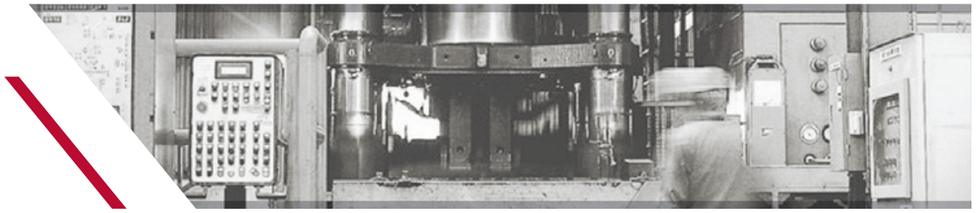

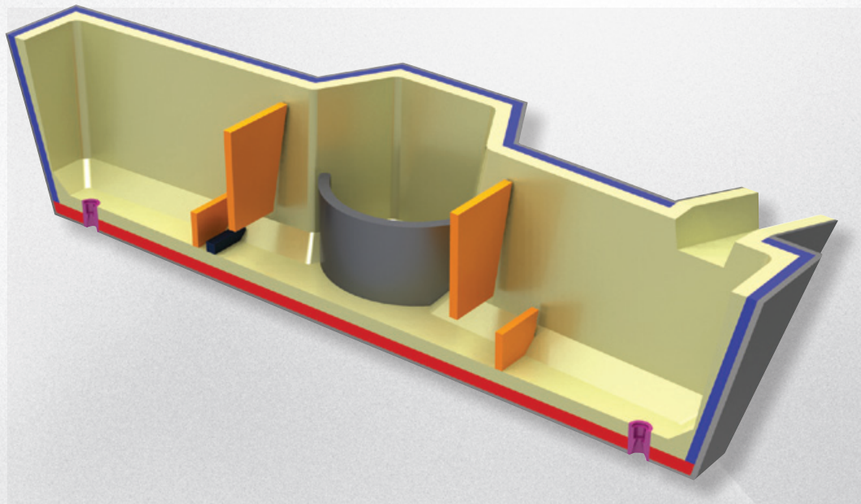

- HTD-75
- LB
- SF-35, J-16
- TA-60
- TMD-160
- TMD-160
- TPB-1
- CTC-63TD

Reheating Furnace

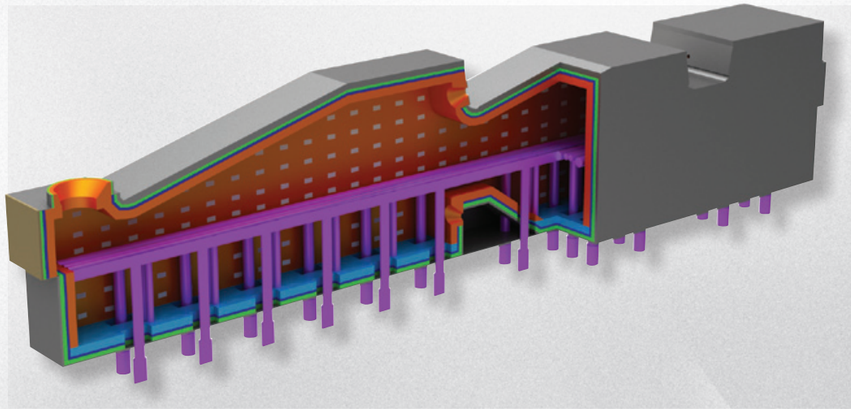

- H-2
- H-3, N1-1, B-4, B-5
- PT-165
- INCT-120
- HACT-75SB
- HACT-75SB
- CA-165SY

Cement Plant

Preheater

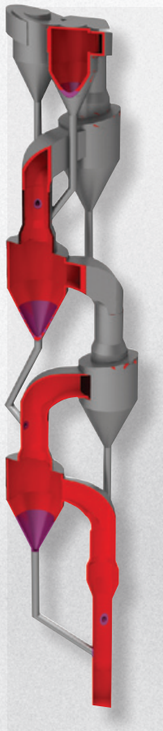

Rotary Kiln

Cooler

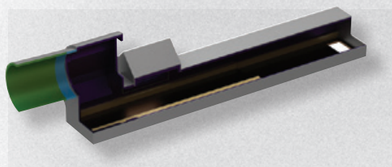

- CH-1, CRK-20S, SB-65
- CRK-7S
- CRK-10S
- CRK-20S
- SCX-15KL, SCX-30KL
- HAS-85, SFC-85, HACT-160

Glass Melting Tank

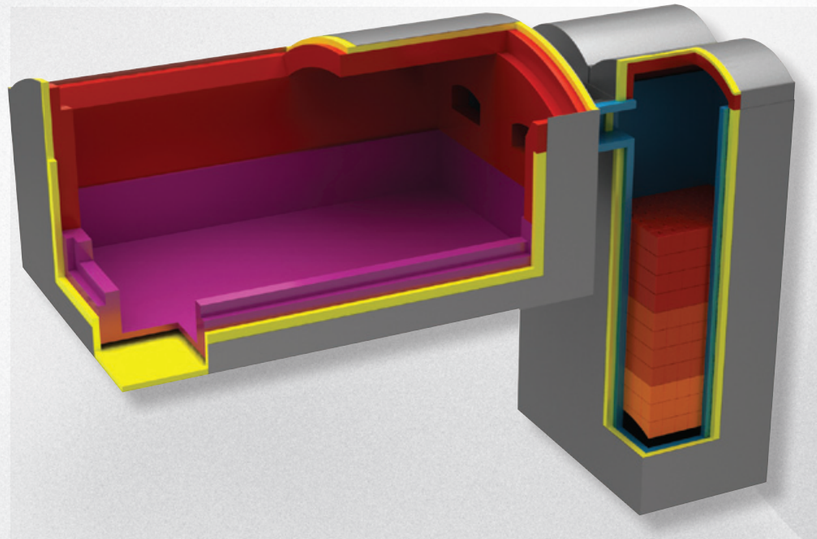

- ZSP,CZ-1
- MUL70,CZ-1
- S-23, MUL60
- MUL70
- HS-1
- MUL65, MUL70
- N1-1, CH-1

Incinerator

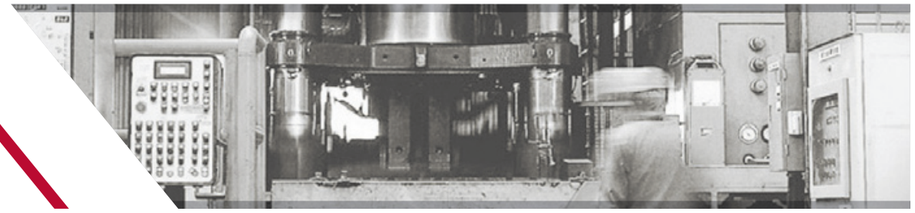

Stoker Type

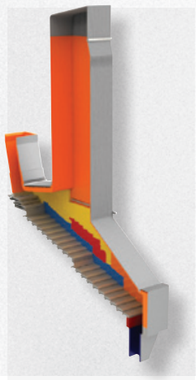

- H-3
- CRK-20S, SB-90S
- SAL-90S, SIL-AH, H-1
- H-3
- HSC-16H
- HACT-160

Rotary Kiln Type

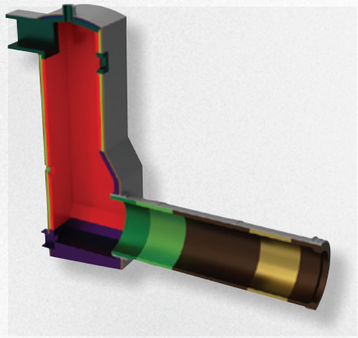

- SF-36
- HSC-18SR
- HSC-UL7S
- HSC-17HS2
- HSC-16HW
- HSC-16H
- HSC-16H

Melting Type

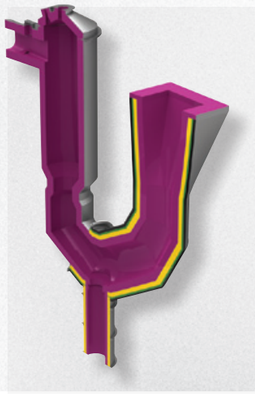

- WMCT-20CR
- INCT-135S

Fluidized-Bed -Combustor

CFB Boiler

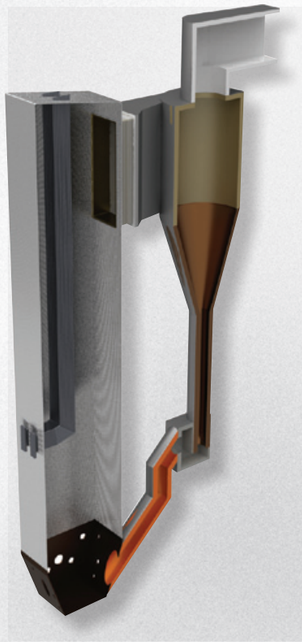

- CZ-1, SIL-AH
- SF-34
- SIL-AH
- HSC-16H
- HSC-16H

Compact CFB Boiler

- HSC-FBW1
- HSC-70FG

Nonferrous Metal Furnace

Ladle Flow Control Refractory

Cu-Melting Furnace

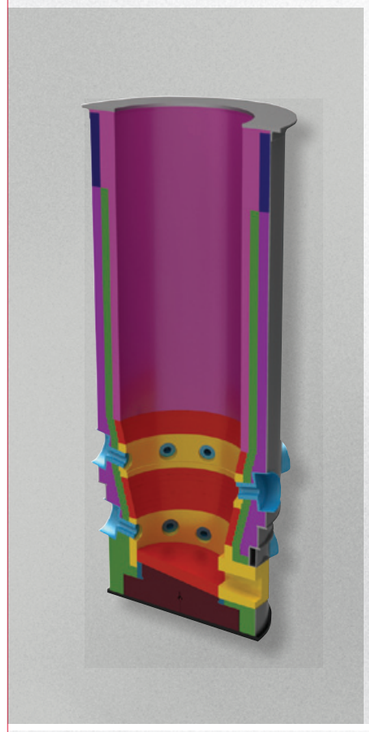

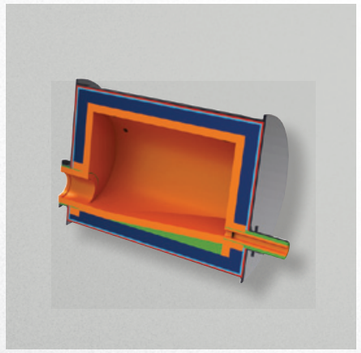

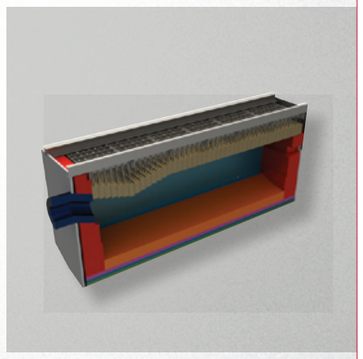

- SSB-3, SB-90S
- SB-90S
- SF-34, SAL-50, SAL-60
- SBN-1
- INCT-140, INCT-160
- HACT-160, HACT-180
- XDMGe-11C
- XDMGe-14
- DMC-9A
- XDMGe-19C

Al-Melting Furnace

- AG-1
- ULW-5
- H-2
- HACT-160
- HACT-165
- ULW-5
- PTA-175

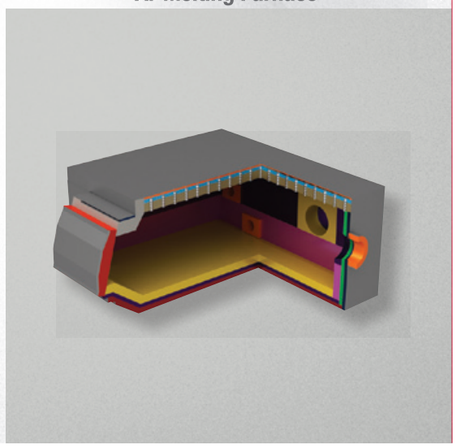

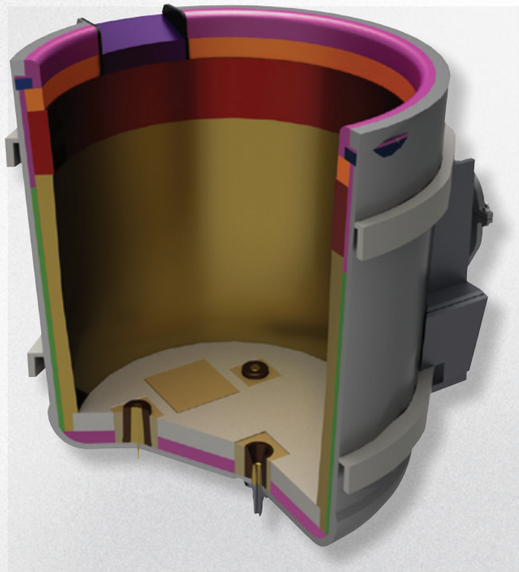

Slide Gate System

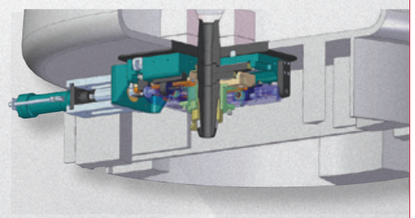

Ar Purging Plug

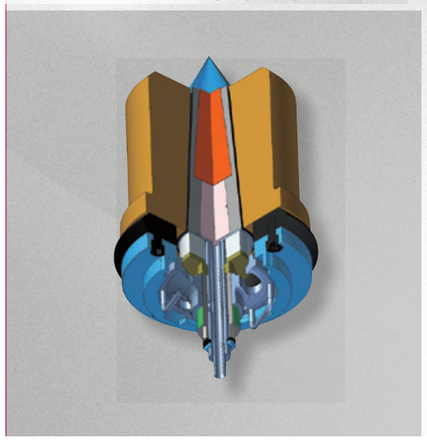

Slide Gate Refractory

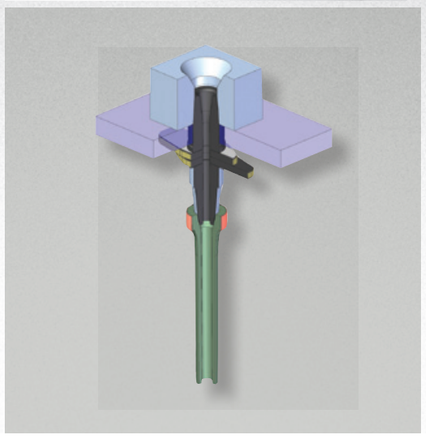

Ladle Slide Gate Refractory

Continuous Casting

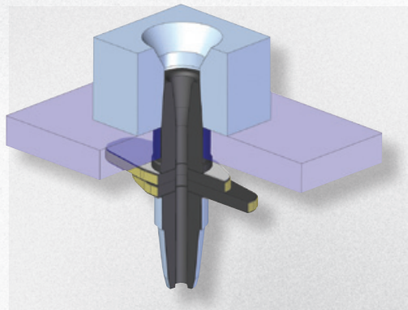

Application	Material	
	Component	Brand
Top Nozzle	Al_2O_3-C Al_2O_3-MgO-C	- CK3-941 - CK3-MC30 - CK3-669 - CK3-B505 - CK3-B817 - CK3-MC80 - CK3-BM07 - CK3-BT90
Plate (Upper & Lower)	Al_2O_3-ZrO_2-C Al_2O_3-C MgO-C ZrO_2	- MSCP-C141 - MSCP-C142 - MSCP-C143 - MSCP-H701 - MSCP-H702 - MSCP-M204 - MSCP-S161
Collector Nozzle	Al_2O_3-C ZrO_2-C	- CK3-738 - CK3-850F - CK3-718 - CK3-890F - CK3-846 - CK3-ZSH-1 - CK3-ZSH-2

Ingot Casting

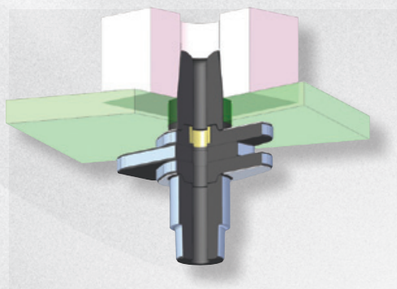

Application	Material	
	Component	Brand
Top Nozzle	Al_2O_3-C Al_2O_3-MgO-C	- CK3-941 - CK3-BT90
Plate (Upper & Lower)	Al_2O_3-ZrO_2-C Al_2O_3-C	- MSCP-C143 - MSCP-H701 - MSCP-H702
Collector Nozzle	Al_2O_3-C	- CK3-846, - CK3-850F

Ladle Ar Purging Plug

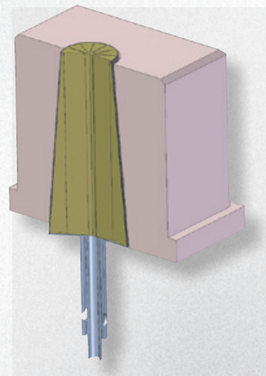

Application	Material	
	Component	Brand
Slot & Slit Plug	Al_2O_3-Spinel Al_2O_3-Spinel-Cr_2O_3	- BPSC-SP90 - BPSC-LP12
Porous Plug	Al_2O_3-Cr_2O_3	- SQPP-95A - PJK-3 - PJP-1 - SQPP-950 - SPA-150
Segment Plug	Al_2O_3-Cr_2O_3	- SB-AC
Seating Block	Al_2O_3-MgO Al_2O_3-Spinel	- NCT-90AM - NCT-90SP

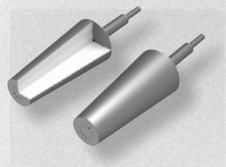

- Slot & Slit Purging Plug (150~300Nl/min)
- For the ladle with high life time at bottom
- High Productivity

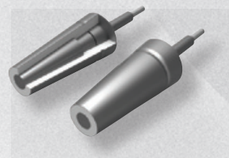

- Porous Purging Plug(100~200Nl/min)
- Fine Bubbling
- For Small size ladle

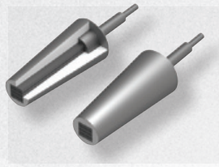

- Segment Purging Plug(100~250Nl/min)
- High Purging rate
- Reducing Molten Steel Infiltration

- Hybrid(porous+Slit) Purging Plug (150~300Nl/min)
- For Small & large Size ladle
- Hard & Soft Bubbling

Perfect Sealing Material

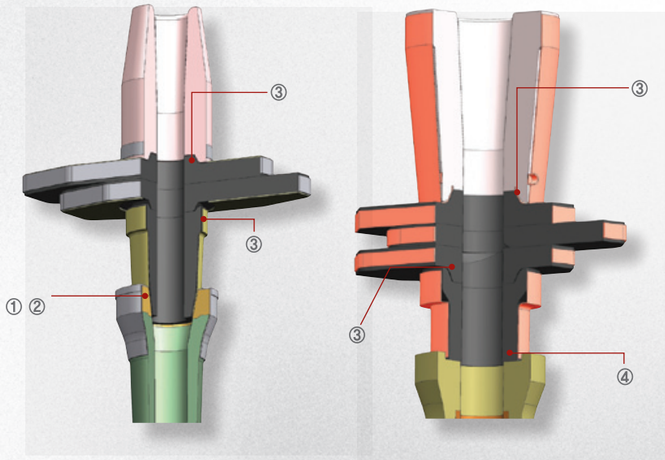

Component	Brand
Al_2O_3-SiO_2	- PSM-A
MgO-SiO_2	- PSM-B

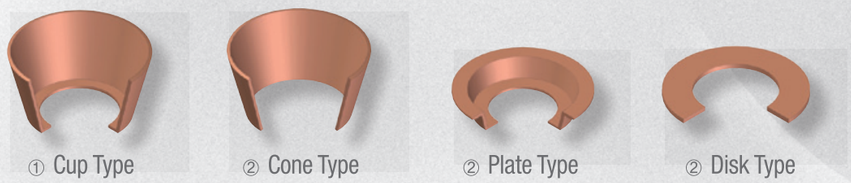

Properties of Sealing Material

- Easy handling(hard type)
- Good sealing at high temperature(low permeability)
- Dense Particle formation.
- High durability against molten steel
- Good disassembly from the nozzle.
- No quality deterioration compare to mortar.
- Good workability
- Low volume change at high temperature.

Ladle Shroud

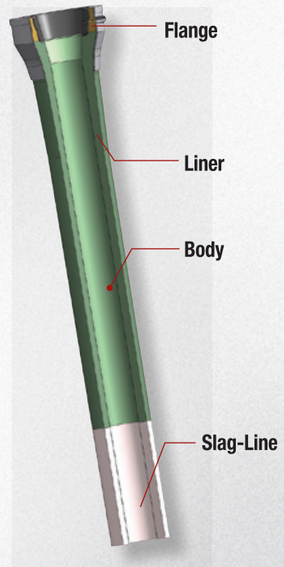

Application	Material	
	Component	Brand
Flange	Al_2O_3-SiO_2-C	- CKL-S20
Liner	Al_2O_3-SiO_2-C	- CKL-S21
Body	Al_2O_3-SiO_2-C	- CKL-S27 - CKL-S19 - CKL-S18
	Al_2O_3-C	- CKL-S68
Slag-Line	Al_2O_3-C	- CKL-S68 - CKL-S13

Normal Type

Bell Type

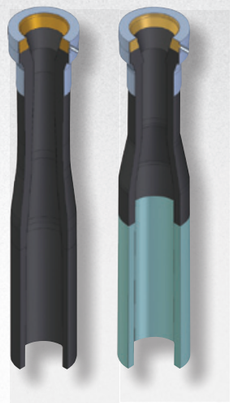

Ar injection

Through Porous Part

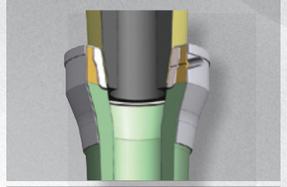

Through Slit

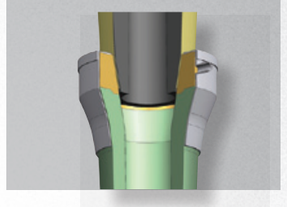

Tundish Flow Control Refractory

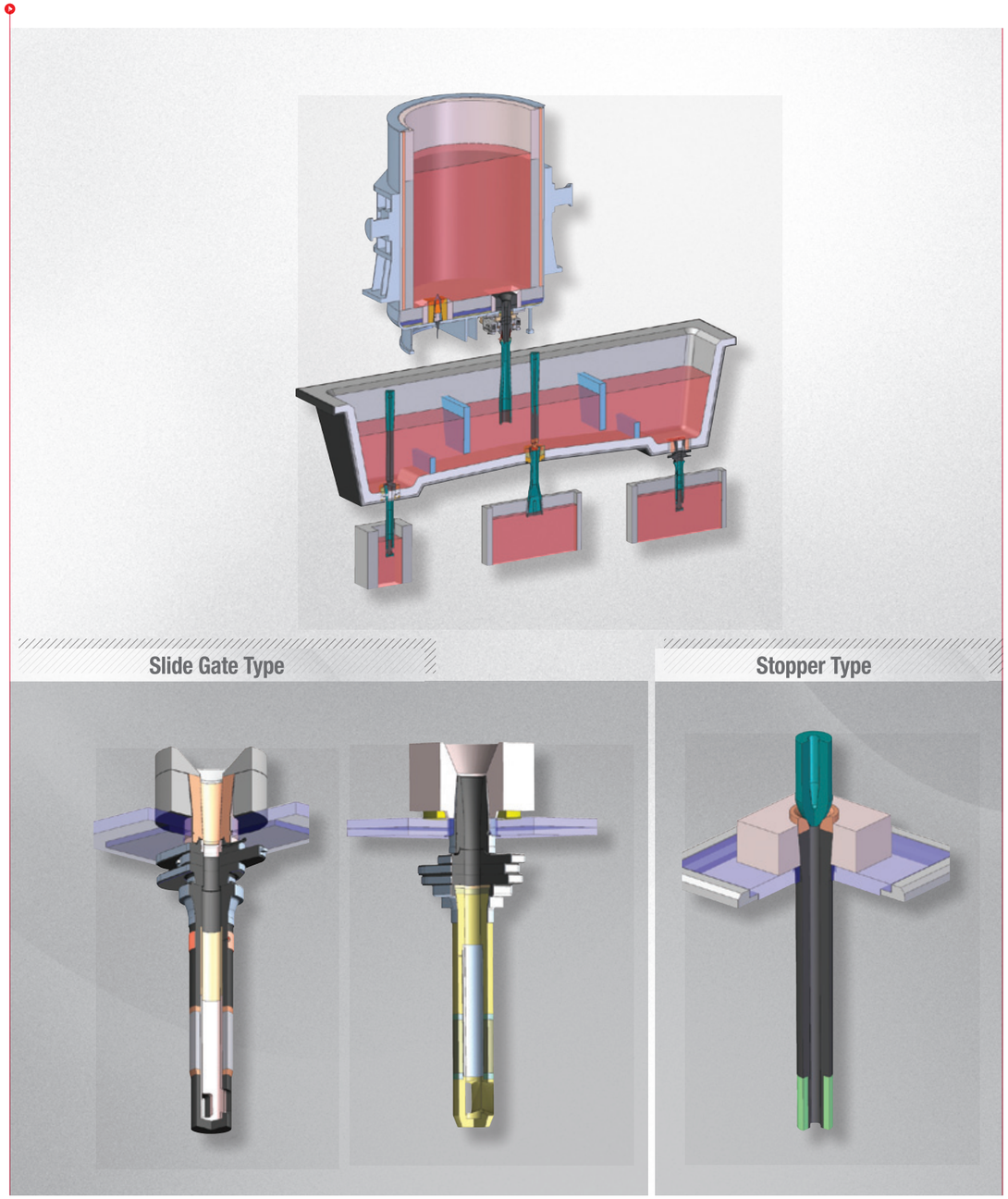

Tundish Slide Gate Refractory

Application	Material	
	Component	Brand
Upper Nozzle (Porous)	Al_2O_3-SiO_2 Al_2O_3 Al_2O_3-Cr_2O_3 Al_2O_3-ZrO_2-Cr_2O_3	- SQUN-MAC - SQUN-S01 - SQUN-MZ10 - SQUN-UNJN
Plate (Upper Middle Lower)	Al_2O_3-ZrO_2-C Al_2O_3-C MgO-C ZrO_2	- MSCP-C144 - MSCP-H704 - MSCP-H703 - MSCP-M201 - MSCP-M202 - MSCP-M203 - MSCP-S161

Application	Material	
	Component	Brand
Flange	Al_2O_3-C	- CKL-S20 - CKS-S83 - CKS-SP12
Body	Al_2O_3-C	- CKSE-A51 - CKSE-A70 - CKSE-A45
Slag-Line	ZrO_2-C	- CKSE-Z79 - CKSE-Z80
Non Clogging	CaO-ZrO_2-C	- CKSE-CS12 - CKSE-CS26 - CKSE-CS13
	Al_2O_3-C	- CKSE-A55
Carbonless	Spinel	- CKSE-F34
	Mullite	- CKSE-C06
Porous	Al_2O_3-C	- CKSE-AP33

Tundish Stopper System Refractory

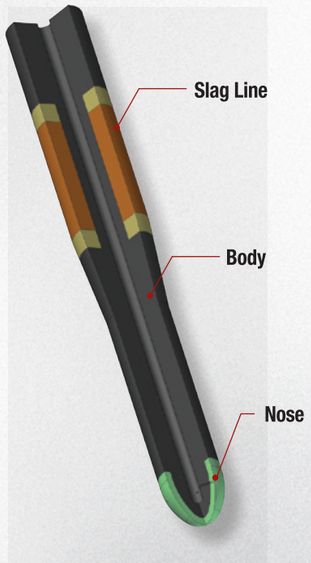

Application	Material	
	Component	Brand
Nose	Al_2O_3-C	- CKS-S84 - CKS-S83
	MgO-C	- CKS-M81 - CKS-M70 - CKS-M73
	Spinlel-C	- CKS-SH60 - CKS-SP12
Body	Al_2O_3-SiO_2-C Al_2O_3-C	- CKS-S50 - CKS-S15 - CKS-C65
Slag-Line	ZrO_2-C	- CKS-Z72
	MgO-C	- CKS-M70

Porous Type

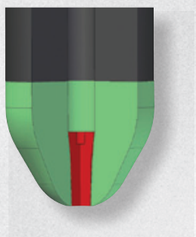

One-Hole Type

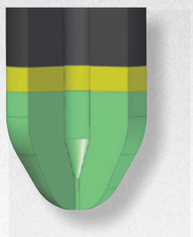

Multi-Hole Type

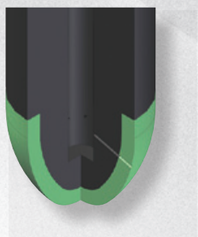

Pin Type

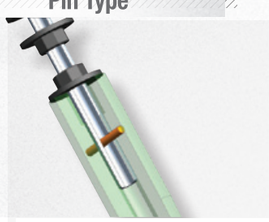

Nut Type

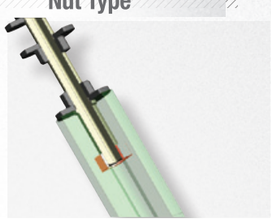

Tundish Stopper System Refractory

One-Piece

2-Piece

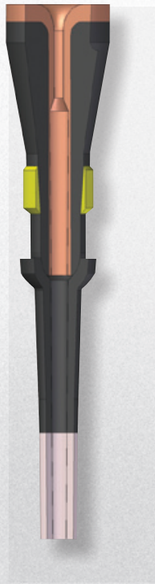

Application	Material	
	Component	Brand
Flange	Al_2O_3-C	- CKL-S20
Body	Al_2O_3-C	- CKSE-A51 - CKSE-A70 - CKSE-A45
Slag-Line	ZrO_2-C	- CKSE-Z79 - CKSE-Z80
Non clogging	CaO-ZrO_2-C	- CKSE-CS12 - CKSE-CS26 - CKSE-CS13
	Al_2O_3-C	- CKSE-A55
Carbonless	Spinel	- CKSE-F34
	Mullite	- CKSE-C06
Porous	Al_2O_3-C	- CKSE-AP33

Inner Nozzle

Application	Material	
	Component	Brand
Flange	Al_2O_3-C	- CKS-S83
Body	Al_2O_3-C	- CKSE-A51
Porous	Al_2O_3-C	- CKSE-AP33
Bottom	Al_2O_3-C	- CKL-S20

Thin Slab Casting & Refractory

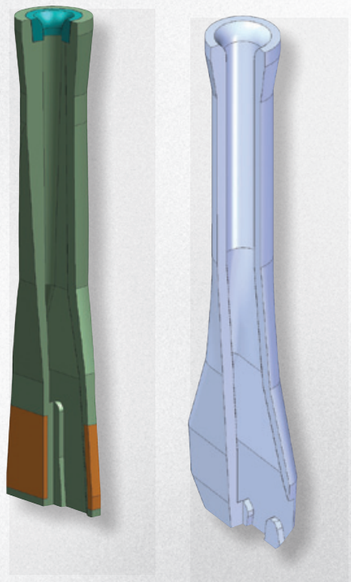

Application	Material	
	Component	Brand
Flange	Al_2O_3-C	- CKS-S84 - CKS-S83
	MgO-C	- CKS-M81 - CKS-M70 - CKS-M73
Body	Al_2O_3-SiO_2-C	- CKSE-A51 - CKSE-A70
Slag-Line	ZrO_2-C	- CKSE-Z79 - CKSE-Z80

FEM

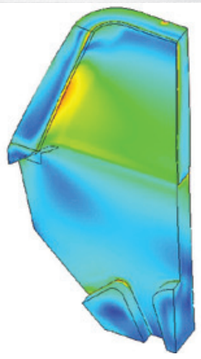

3D-Fluid Analisys

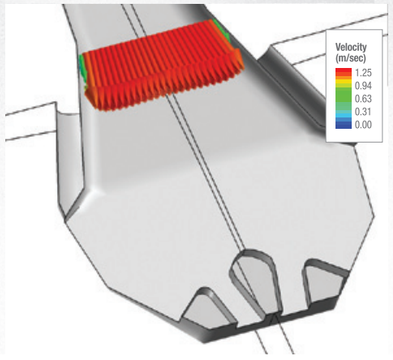

Temperature Measuring Tube

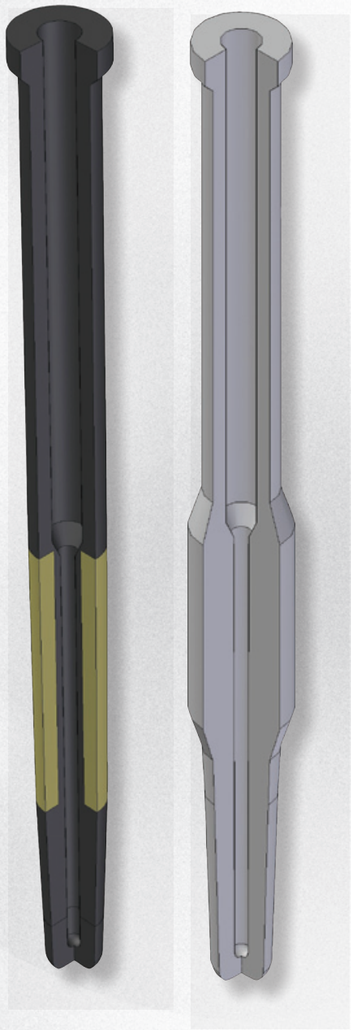

Application	Material	
	Component	Brand
Body	Al_2O_3-SiO_2-C Al_2O_3-MgO-C	- CKS-S15 - CKS-SH60
Slag-Line	ZrO_2-C	- CKSE-Z79
	MgO-C	- CKS-M70

Ladle Slide Gate System(EG)

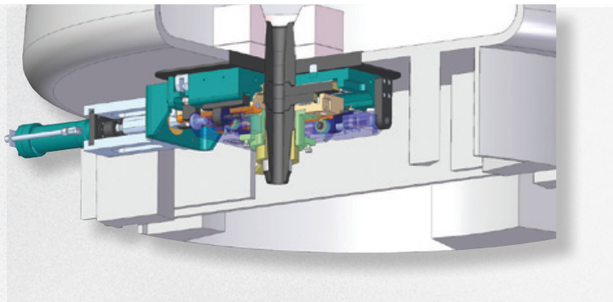

EG Series Technical Data

Brand	EG-150	EG-200	EG-230
Ladle capacity (ton)	~ 150 to	70 ~ 180 to	150 ~ 300 to
Maximum bore diameter	Ø80mm	Ø100mm	Ø110mm
Sliding stroke	150mm	200mm	230mm
Weight (approx.)	650kg	750kg	850kg

EG Gate Main Parts

1. Upside Frame
2. Spring Guide Shaft
3. Coil Spring
4. Spring Support
5. Slide Frame
6. Lower Frame
7. Protection Shield
8. Collector Nozzle Holder
9. Connecting Rod
10. Hadraulic Cylinder Holder
11. Hydraulic Cylinder

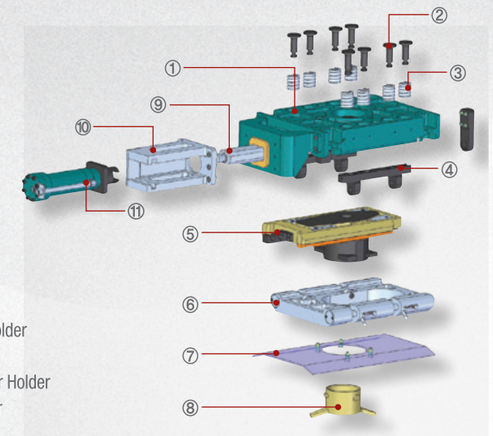

Tundish Slide Gate System(AZC)

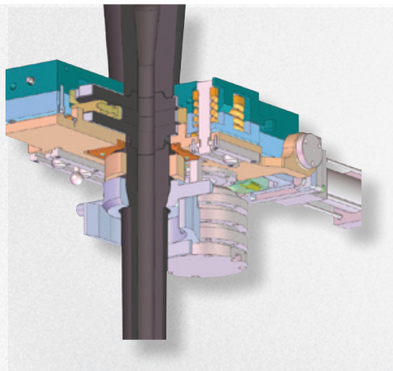

AZC Series Technical Data

Brand	AZC-70	AZC-90	AZC-125
Maximum bore diameter	Ø30mm	Ø45mm	Ø90mm
Closing stroke	70mm	90mm	125mm
Weight (approx.)	100kg	150kg	300kg
Product application	BT	BT/BL/BB	Slab

AZC Gate Main Parts

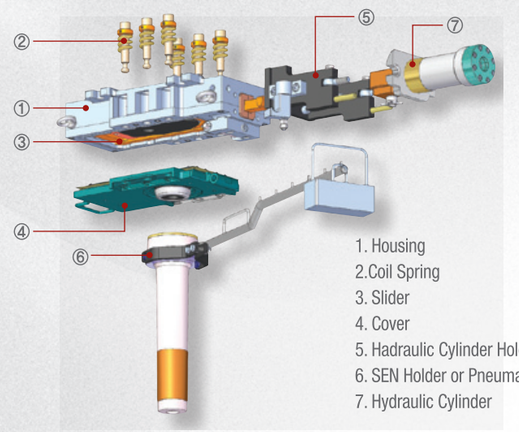

1. Housing
2.Coil Spring
3. Slider
4. Cover
5. Hadraulic Cylinder Holder
6. SEN Holder or Pneumatic Cylinder
7. Hydraulic Cylinder

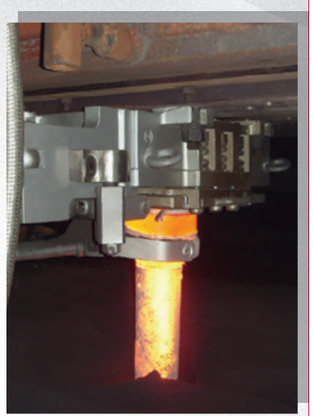

Tundish Slide Gate With Tube Changer(P-AQC)

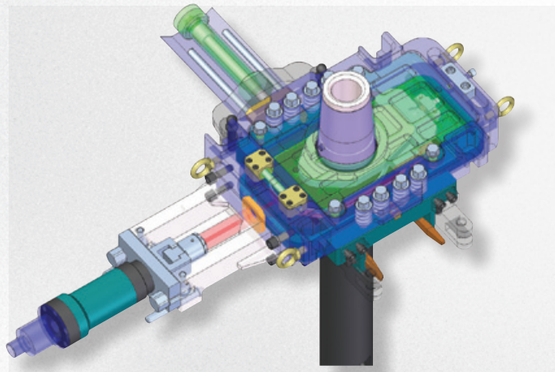

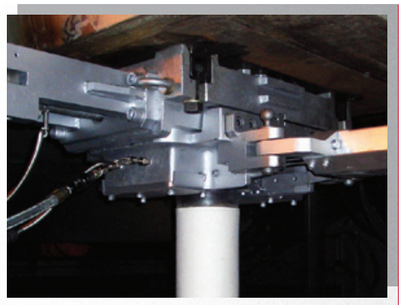

P-AQC Tube Changer Technical Data

Maximum bore diameter	Ø90mm
Closing stroke	125mm
Weight (approx.)	550kg
Product application	Slab

P-AQC Tube Changer Main Parts

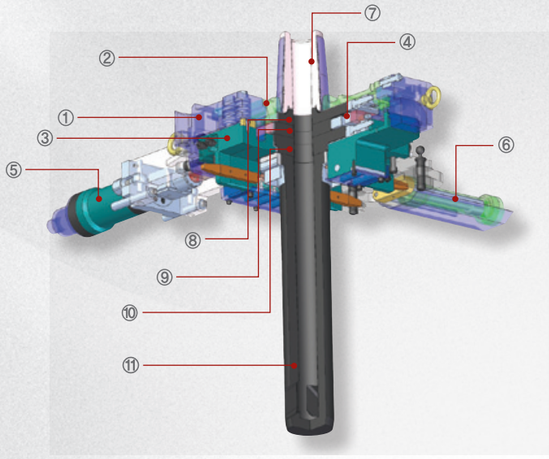

1. Housing
2. Upper Cover
3. Lower Housing
4. Slider
5. Hydraulic Cylinder For Slider
6. Hydraulic Cylinder For Tube Changing
7. Upper Nozzle
8. Upper Plate
9. Middle Plate
10. Lower Plate
11. Tube(Submerged Entry Nozzle)

Stopper With Tube Changer(SSC-80)

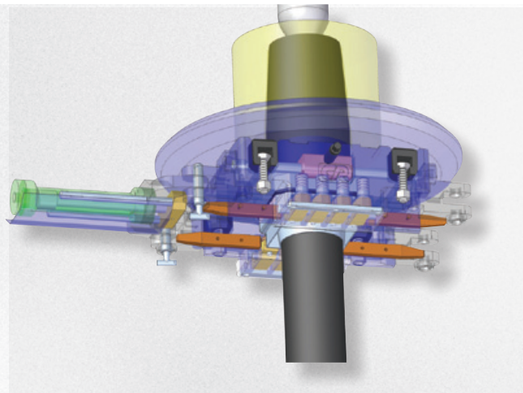

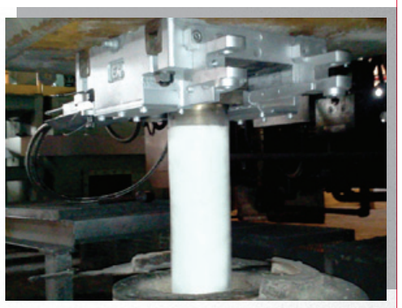

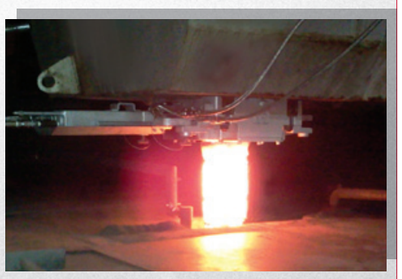

SSC-80 Tube Changer Technical Data

Maximum bore diameter	Ø90mm
Tube Exchange stroke	225mm
Weight (approx.)	180kg
Product application	Slab

SSC-80 Tube Changer Main Parts

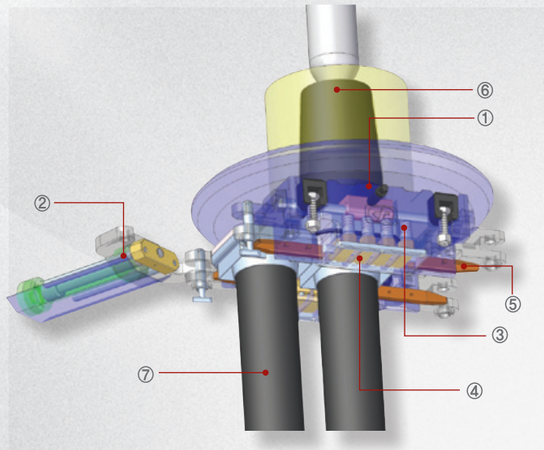

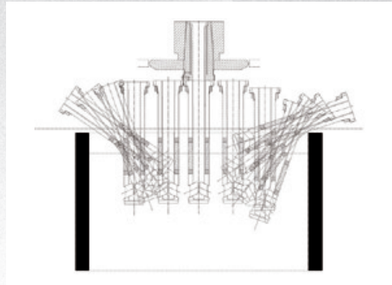

1. Housing
2. Tube Changing Cylinder
3. Coil Spring
4. Finger
5. Guide Rail
6. Inner Nozzle
7. Tube(Submerged Entry Nozzle)

Tundish Nozzle Changer(ONQC)

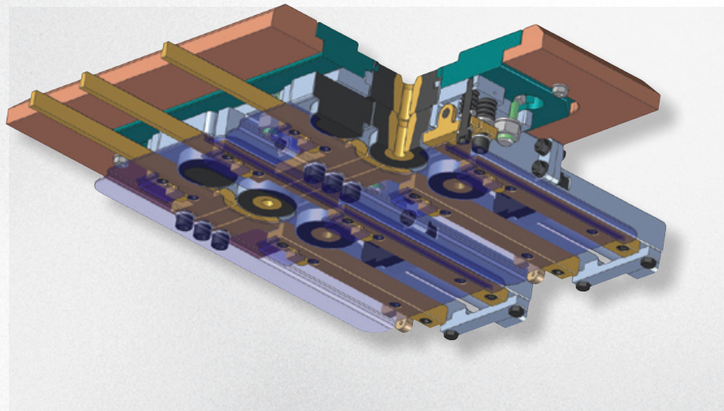

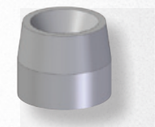

Well Block

Joint Sheet

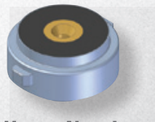

Upper Nozzle

Lower Nozzle

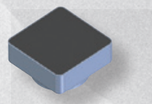

Blank

ONQC Technical Data

Nozzle exchange time	< 0.3 second
Nozzle bore diameter	Up to 22mm
Weight (approx.)	28kg
Hydraulic actuator	St. 130, Ø40 x Ø22 Weight : 4.5kg

ONQC Application

Open Stream Casting

Submerged Casting

Submerged Quick Changer

Ladle Purging Plug Closer(SPC)

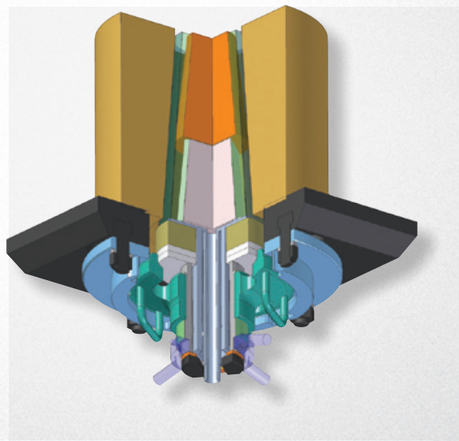

SPC Technical Data

Screw block		110mm Screw
Purging plug	Outside Dia.	Up to 230mm
	Length	Up to 450mm
Weight (approx.)		5kg

SPC Main Parts

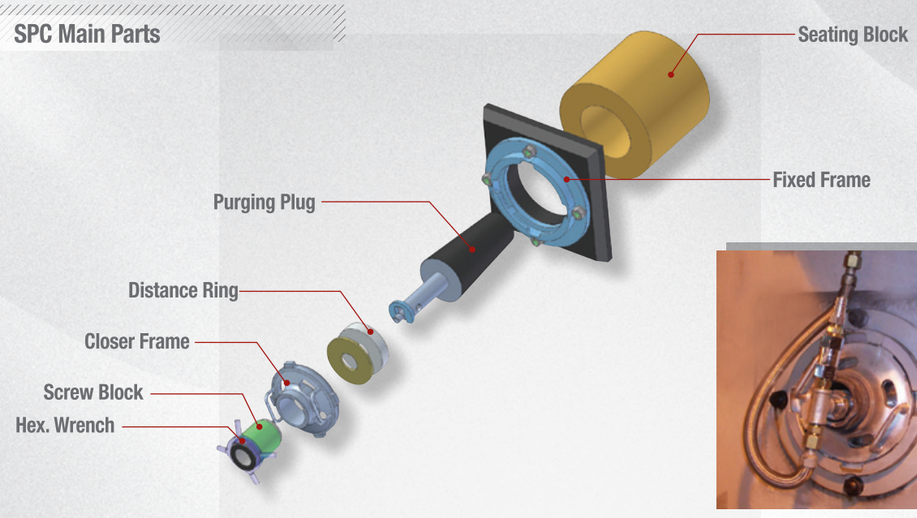

High Alumina Bricks

	Refractoriness	AP	BD	CCS	PLC (1,400˚C)	PLC (1,500˚C)	PLC (1,600˚C)	PLC (1,650˚C)	TE (1,000˚C)	RUL T2		Al_2O_3	MgO	Fe_2O_3	Cr_2O_3	P_2O_5	Main Applications
	SK	%	g/cm³	kg/cm²	%	%	%	%	%			%	%	%	%	%	
High Alumina Bricks																	
H-1	38	20	2.58	550		0.0			0.65	1,580		73		1.5			Various furnace
H-2	37	20	2.48	500		0.0			0.60	1,500		63		1.5			Various furnace
H-3	36	20	2.38	450		0.0			0.53	1,470		52		1.6			Various furnace
H-3S	36	19	2.38	500		0.0			0.50	1,480		52		1.5			Various furnace
H-4	35	20	2.28	400	0.0				0.50	1,450		48		1.6			Various furnace
H-4S	35	19	2.33	450	0.0				0.50	1,460		48		1.5			Various furnace
SAL-50	36	16	2.40	600		0.0			0.50	1,550		53		1.5			Lime Kiln, Cement Kiln, Reheating furnace, Glass Melting Tank, etc.
SAL-60	37	17	2.50	650		0.0			0.53	1,580		62		1.5			Lime Kiln, Cement Kiln, Reheating furnace, Glass Melting Tank, etc.
SAL-70	38	18	2.65	700		0.0			0.55	1,600		72		1.2			Lime Kiln, Cement Kiln, Reheating furnace, Soaking Pits, etc.
SAL-75	39	18	2.77	700			0.0		0.65	1,650		76		1.0			Lime Kiln, Cement Kiln, Various Rotary Kiln, Reheating furnace, E.A.F etc.
SAL-75Z(ACD)	39	17	2.80	800		0.0			0.50	1,650		78		1.0			Lime Kiln, Cement Kiln, Various Rotary Kiln
SAL-80	39	18	2.85	800			0.0		0.65	1,670		82		0.8			Lime Kiln, Cement Kiln, Various Rotary Kiln, Reheating furnace, Soaking Pits, Various High temp. Furnace
SAL-80C	39	15	2.90	850			0.0		0.68	1,670		82			4		Lime Kiln, Cement Kiln, Various Rotary Kiln, Reheating furnace, Soaking Pits, Various High temp. Furnace
SAL-85	40	18	2.95	800			0.0		0.68	1,700		86		0.6			Lime Kiln, Cement Kiln, Various Rotary Kiln, Reheating furnace, Soaking Pits, Various High temp. Furnace
SAL-85C	40	17	3.00	850			0.0		0.72	1,700		86			5		Hot blast Stove, Chemical Reactor Inclnerator, Glass Melting Tank
SAL-85N	40	20	2.90	900			0.0		0.70	1,700		87		0.7		1	Al Melting Kiln, Various Non ferreous metal melting furnace
SAL-85BR	42	18	3.25	1,000				0.0	0.78	1,700		83		0.3	10		Carbon productor, Glass Melting furnace, VariousHigh temp. furnace
SAL-90	40	15	3.10	900				0.0	0.70	1,700		91		0.3			Hot blast Stove,Electric Kiln, Reheating Furnace Cupolar Various High temp.
SAL-95	41	14	3.20	1,000				0.0	0.75	1,700		96		0.2			Rotary Shaft kiln, High temp. furnace
SAL-95S	41	18	3.15	900				0.0	0.74	1,700		96		0.2			Ammonia plant, Carbon productor, Rotary Shaft kiln, Various High temp. furnace
SAL-99	42	15	3.30	900				0.0	0.78	1,700		99		0.1			Ammonia plant, Carbon productor, Rotary Shaft kiln, Various High temp. furnace
SIL-A	38	15	2.55	700		0.0			0.53	1,650		67					Checker Rider Arch
SIL-AH	38	15	2.58	800		0.0			0.55	1,650		67					Checker Rider Arch, FINEX Reacter
SIL-B	36	17	2.50	650		0.0			0.56	1,530		57					Checker Rider Arch
SIL-C	36	15	2.52	900		0.0			0.42	1,550		63	3	1.2			Blast Furnace stave
SIL-1	38	15	2.62	900		0.0			0.55	1,650		72		1.1			Blast Furnace Tuyere Tap Hold
SIL-2	37	14	2.60	1,100		0.0			0.53	1,650		65		0.9			Blast Furnace Upper shaft
MUL-60	37	16	2.50	600		0.0			0.46	1,580		61					Checker Super Structure Burner Block
MUL-65	38	15	2.55	700		0.0			0.47	1,600		66					Checker Super Structure Burner Block
MUL-70	38	17	2.60	800		0.0			0.48	1,650		71					Checker Super Structure Burner Block Sub paving roof of glass melting Tanks for Fiber glass
MUL-75	39	16	2.56	950		0.0			0.50	1,680		75		0.7			Blast Furnace etc.
MUL-F	39	18	2.70	750		0.0			0.45	1,700		76					Checker Super Structure Burner Block, Sub paving roof of glass melting Tanks for Fiber glass
MUL-EF	39	17	2.75	800		0.0			0.50	1,700		77					Checker Super Structure Burner Block, Sub paving roof of glass melting Tanks for Fiber glass
MUL-1	37	14	2.60	1,200		0.0			0.48	1,650		70		0.7			Blast Furnace, FINEX Melter

■ AP : Apparent Porosity ■ BD : Bulk Density ■ CCS : Cold Crushing Strength ■ CA : Chemical Anaysis ■ MOR : Modulus Of Rupture ■ PLC : Permanent Linear Change
■ TE : Thermal Expansion ■ TC : Thermal Conductivity ■ RUL : Refractoriness Under Load

*The above table indicates the standard quality of our products.

High Alumina Bricks

	Refractoriness	AP	BD	CCS	PLC (1,500℃)	PLC (1,550℃)	PLC (1,600℃)	TE (1,000℃)	TC (1,000℃)	RUL T2			Al_2O_3	Fe_2O_3	ZrO_2	Cr_2O_3	SiC	P_2O_5	Main Applications
	SK	%	g/cm³	kg/cm²	%	%	%	%	kcal/m.h.℃	℃			%	%	%	%	%	%	
High Alumina Bricks																			
UF-RBA		13	3.08	2,200				0.58	5.50	1,700			85	0.3					Blast Furnace, FINEX Melter
RBAL-15		13	3.15	1,800				0.55	3.10				86	0.1			5		Blast Furnace, FINEX Melter
B-ACS99		14	2.49	900					8.20				61				30		Blast Furnace stove
SP-26F	36	19	2.28	500	0.0			0.50		1,550			57	1.5					Hot stove
SP-21	38	18	2.65	800	0.0			0.49		1,650			72	0.6					Hot stove
SP-21H	39	16	2.56	950	0.0			0.50		1,680			75	0.7					Hot stove
SHP-2	38	17	2.65	670				0.60		1,650			68	0.8					Hot stove
CZ-1	34	10	3.35	2,000	0.0			0.60					59	0.3	23				Regenerator Checker, Port-neck, Fore-hearth, FINEX Reacter
CZ-2	34	13	3.25	1,500	0.0			0.65					68	0.3	19				Regenerator Checker, Port-neck, Fore-hearth, FINEX Reacter
S-21	38	18	2.65	800	0.0			0.49		1,650			72	0.3					Walls, Dome, Checker, Burner
S-23	38	18	2.55	750			0.0	0.49		1,600			67	1.2					Walls, Checker
S-25	37	18	2.50	600	0.0			0.47		1,580			62	1.3					Walls, Checker
S-26	36	18	2.45	550	0.0			0.53		1,550			58	1.4					Walls, Checker
S-34	34	14	2.27	850	0.0			0.54		1,470			43	1.2					Walls, Checker
S-35	35	13	2.38	900	0.0			0.53		1,500			46	1.1					Walls, Checker
S-36	36	13	2.40	900	0.0			0.53		1,530			49	1.1					Walls, Checker
HR-88B	39	15	2.95	1,500	0.5			0.67		1,600			86					1	Roof of E.A.F
HR-80R	40	18	2.88	600	0.3			0.65		1,600			82			3			Roof of E.A.F
HR-75	39	18	2.80	500	0.2			0.63		1,600			78						Roof of E.A.F
BF-90S	40	13	3.15	2,000				0.72		1,700			93	0.3					Blast Furnace
TL-60	37	15	2.60	500				0.55		1,600			63						Various Furnace
TL-40	32	20	2.15	400				0.54		1,380			35						Various Furnace
TC-90R	40	13	3.25	1,000		0.3		0.67		1,700			96	0.5		1.5			Special Refining Furnace, Refining L/D
TC-90A	40	13	3.25	1,000	0.3			0.70		1,700			92	0.5					Special Refining Furnace, Refining L/D
TC-80	40	17	2.87	800	0.3			0.64		1,650			84	0.8					Special Refining Furnace, Refining L/D
TB-80	39	18	2.85	500	0.5			0.71		1,550			82	1.6					Ladle
TB-80S		16	2.75	700	0.0			0.60					76					1	Tundish N/Z Seating Block
TA-70	38	17	2.70	600	0.5			0.60		1,620			72	1.2					Ladle, Tundish
TA-60	37	15	2.60	500	0.5			0.55		1,600			63	1.2					Ladle, Tundish

■ AP : Apparent Porosity ■ BD : Bulk Density ■ CCS : Cold Crushing Strength ■ CA : Chemical Anaysis ■ MOR : Modulus Of Rupture ■ PLC : Permanent Linear Change
■ TE : Thermal Expansion ■ TC : Thermal Conductivity ■ RUL : Refractoriness Under Load

*The above table indicates the standard quality of our products.

Fireclay Bricks

	Refractoriness	AP	BD	CCS	PLC (1,350˚C)	PLC (1,400˚C)	PLC (1,500˚C)	TE (1,000˚C)	RUL T2			Al_2O_3	Fe_2O_3	Main Applications
	SK	%	g/cm³	kg/cm²	%	%	%	%	˚C			%	%	
Fireclay Bricks														
N1-1	34	19	2.25	400		0.0		0.56	1,370			40	1.9	Used in various furnace as bricks in accordance with KSL
N2-1	33	19	2.20	350		0.0		0.52	1,360			35	2.0	Used in various furnace as bricks in accordance with KSL
N3-1	32	19	2.15	350	0.0			0.53	1,360			35	2.0	Used in various furnace as bricks in accordance with KSL
N3-2	32	21	2.10	300	0.0			0.53	1,290			33	2.0	Used in various furnace as bricks in accordance with KSL
CH-S	34	17	2.32	500	0.0			0.52	1,450			43	1.5	Lime kiln Reheating Furnace, Soaking Furnace, Cement Rotary kiln, Non ferreous, Metal furnace
CH-1	34	17	2.30	450	0.0			0.57	1,400			40	1.7	Lime kiln Reheating Furnace, Soaking Furnace, Cement Rotary kiln, Non ferreous, Metal furnace
CH-2	33	17	2.23	400	0.0			0.58	1,350			38	1.7	Lime kiln Reheating Furnace, Soaking Furnace, Cement Rotary kiln, Non ferreous, Metal furnace
CH-3	32	17	2.21	350	0.0			0.58	1,350			35	1.7	Lime kiln Reheating Furnace, Soaking Furnace, Cement Rotary kiln, Non ferreous, Metal furnace
SF-31S	31	13	2.17	600			0.0	0.42	1,350			28	1.3	Coke oven, Topedo Car, Cement Rotary kiln, Chemical Reactor, inclnerator, Non ferreous metal Furnace, Glass Furnace
SF-32	32	15	2.20	500			0.0	0.60	1,400			34	1.3	Coke oven, Topedo Car, Cement Rotary kiln, Chemical Reactor, inclnerator, Non ferreous metal Furnace, Glass Furnace
SF-34	34	15	2.32	650			0.0	0.56	1,500			43	1.2	Coke oven, Topedo Car, Cement Rotary kiln, Chemical Reactor, inclnerator, Non ferreous metal Furnace, Glass Furnace
SF-35	35	13	2.33	700			0.0	0.58	1,500			45	1.2	Coke oven, Topedo Car, Cement Rotary kiln, Chemical Reactor, inclnerator, Non ferreous metal Furnace, Glass Furnace, Blast Furnace, FINEX Reacter
SF-36	35	13	2.36	800			0.0	0.58	1,520			49	1.2	Coke oven, Topedo Car, Cement Rotary kiln, Chemical Reactor, inclnerator, Non ferreous metal Furnace, Glass Furnace
SF-S	1200˚C	11	2.20	1,000			0.0	0.60	1,300			26	1.5	For Waste Acid, Chemical Reactor
FN-1	34	12	2.39	870			0.0	0.59	1,520			44	1.3	Blast Furnace, Hot stove Walls, Checker
SP-34F	34	20	2.10	600	0.0			0.56	1,450			45	1.2	Blast Furnace, Hot stove Walls, Checker
SP-35F	35	19	2.15	650	0.0			0.58	1,500			48	1.5	Blast Furnace, Hot stove Walls, Checker
HN-41	34	20	2.25	400		0.0		0.54	1,400			42	1.9	Blast Furnace, Hot stove Walls, Checker
HN-42	32	20	2.15	400	0.0			0.54	1,380			35	1.9	Blast Furnace, Hot stove Walls, Checker
HN-43	31	20	2.05	350	0.0			0.55	1,350			32	2.0	Blast Furnace, Hot stove Walls, Checker
ICR-50	36	23	2.30	400			0.3	0.60	1,430			52	2.5	Casting and molding stopper Head Sleeve, Nozzle
ICR-40	34	24	2.25	300	0.5			0.60	1,400			43	2.5	Casting and molding stopper Sleeve, Nozzle
ICR-30	32	24	2.15	250	0.5			0.50	1,350			32	2.5	Casting and molding stopper Sleeve, Nozzle

■ AP : Apparent Porosity ■ BD : Bulk Density ■ CCS : Cold Crushing Strength ■ CA : Chemical Anaysis ■ MOR : Modulus Of Rupture ■ PLC : Permanent Linear Change
■ TE : Thermal Expansion ■ TC : Thermal Conductivity ■ RUL : Refractoriness Under Load

*The above table indicates the standard quality of our products.

Zircon Bricks · High Silica Bricks

Zircon Bricks

	AP	BD	CCS	PLC (1,500˚C)	TE (1,000˚C)	ZrO_2	Main Applications
	%	g/cm³	kg/cm²	%	%	%	
Zircon Bricks							
SZ	16	3.00	500		0.60	42	Ladle Wall & Bottom
ZLB	17	3.50	500	0.0	0.45	58	Ladle Wall & Bottom
ZSH	20	3.35	400			59	Stopper Head & Sleeve
ZSL	18	3.45	500			57	Stopper Head & Sleeve
ZSP	18	3.75	700	0.0	0.45	65	Sub-Paving, Crown
ZWB	17	3.50	500		0.50	55	Ladle well Block
ZNH	18	3.50	800	0.0	0.45	60	Tundish N/Z Seating Block
ZRB-S	18	4.70	700	0.0	0.80	94	Tundish Nozzle
ONQC-NZ	17	4.80	900	0.0	0.80	95	Open nozzle, quick change nozzle & saeting block

High Silica Bricks

	Refractoriness	AP	BD	CCS	PLC (1,500˚C)	TE (1,000˚C)	RUL T2	Al_2O_3	SiO_2	Fe_2O_3	Main Applications
	SK	%	g/cm³	kg/cm²	%	%	˚C	%	%	%	
High Silica Bricks											
LHS		14	2.25	350	5.0	0.52		14	84	0.3	Ladle, Tundish
LB		15	2.20	300	4.0	0.51		17	80	0.5	Ladle, Tundish
HS-1	32	22	1.80	400	0.2	1.25	1,650		95	0.5	Hot Stove

■ AP : Apparent Porosity ■ BD : Bulk Density ■ CCS : Cold Crushing Strength ■ CA : Chemical Anaysis ■ MOR : Modulus Of Rupture ■ PLC : Permanent Linear Change
■ TE : Thermal Expansion ■ TC : Thermal Conductivity ■ RUL : Refractoriness Under Load

Magnesia · Magnesia-Chrome Bricks

Magnesia / Magnesia-Chrome Bricks

	AP	BD	CCS	PLC (1,500˚C)	SiO_2	MgO	CaO	Cr_2O_3	Main Applications
	%	g/cm³	kg/cm²	%	%	%	%	%	
Magnesia Bricks									
FMB-1	15	2.96	650	0	2	96	1		EAF, BOF Permanent
FMB-2	19	2.80	400	0	4	92	3		EAF, BOF Permanent
Magnesia Chrome Bricks									
XDMGe-19C	17	3.15	720			70		19	Non ferreous, Metal furnace
XDMGe-14C	18	3.05	550			64		15	Non ferreous, Metal furnace
XDMGe-11C	17	3.05	530			73		12	Non ferreous, Metal furnace
DMC-9A	17	3.00	450			74		10	Non ferreous, Metal furnace

*The above table indicates the standard quality of our products.

Alumina Silicon Carbide Bricks

	AP	BD	CCS	PLC (1,350˚C)	PLC (1,500˚C)	TE (1,000˚C)	Al_2O_3	Fe_2O_3	SiC	Main Applications
	%	g/cm³	kg/cm²	%	%	%	%	%	%	
Alumina Silicon Carbide Bricks										
CRK-22S	13	2.60	850	0.0		0.42	43	0.6	23	Cement Rotary Kiln, Incinerate (Stoker, Rotary Kiln), Chemical Reactor, Lime Shaft kiln, etc.
CRK-20S	14	2.60	830		0.0	0.41	42	0.7	23	Cement Rotary Kiln, Incinerate (Stoker, Rotary Kiln), Chemical Reactor, Lime Shaft kiln, etc.
CRK-10S	15	2.63	820		0.0	0.45	57	0.8	11	Cement Rotary Kiln, Incinerate (Stoker, Rotary Kiln), Chemical Reactor, Lime Shaft kiln, etc.
CRK-7S	15	2.40	780		0.0	0.46	50	0.8	7	Cement Rotary Kiln, Incinerate (Stoker, Rotary Kiln), Chemical Reactor, Lime Shaft kiln, etc.
CRK-5S	14	2.70	1,000		0.0	0.5	66	1.2	5	Various Rotary Kiln, Incinerate(Stoker)
HA-4S	15	2.55	920		0.0	0.52	70	0.8	4	Various Rotary Kiln, Incinerate(Stoker)
HA-3S	15	2.65	880		0.0	0.54	72	1.2	3	Various Rotary Kiln, Incinerate(Stoker)
AS-1	15	2.82	1,100			0.47	68		19	Runner Outside

■ AP : Apparent Porosity ■ BD : Bulk Density ■ CCS : Cold Crushing Strength ■ CA : Chemical Anaysis ■ MOR : Modulus Of Rupture ■ PLC : Permanent Linear Change
■ TE : Thermal Expansion ■ TC : Thermal Conductivity ■ RUL : Refractoriness Under Load

Silicon Carbide Bricks

	AP	BD	CCS	TE (1,000˚C)	SiC	Main Applications
	%	g/cm³	kg/cm²	%	%	
Silicon Carbide Bricks						
SSB-2	14	2.66	1,700	0.43	90	Blast Furnace, FINEX Melter
SSB-3	14	2.68	1,700	0.43	95	Blast Furnace, Nonferrous Metal furnace, Incinerate, Various Rotary kiln
SBAN-1	14	2.65	1,500	0.43	92	Various Furnace
SB-90S	15	2.65	1,350	0.45	91	Various Furnace
SB-85S	13	2.65	1,200	0.45	85	Blast Furnace, Nonferrous Metal furnace, Incinerate, Various Rotary kiln(Cement kiln Pelletizing Furnace)
SB-65S	15	2.70	900	0.48	65	Incinerate, Cement Plant
SB-30	15	2.55	750	0.46	35	Incinerate, Cement Plant

*The above table indicates the standard quality of our products.

Carbon Containing Bricks

	AP	BD	CCS	PLC (1,400˚C)	PLC (1,500˚C)	TE (1,000˚C)			Al_2O_3	MgO	SiC	T.C	Main Applications
	%	g/cm³	kg/cm²	%	%	%			%	%	%	%	
Al_2O_3-SiC-C Bricks													
ALSICA-AX1	5	3.03	450			0.60			72		10	15	Torpedo Ladle Car Slag-line
ALSICA-AX2	7	3.00	450			0.60			70		11	15	Torpedo Ladle Car Metal-line
ALSICA-AX3	8	2.97	500			0.58			70		10	14	Torpedo Ladle Car Roof
ALSICA-S1	9	2.98	450			0.55			60		10	14	Torpedo Ladle Car Slag-line
ALSICA-S2	9	2.92	450			0.55			65		10	14	Torpedo Ladle Car Metal-line
ALSICA-2	12	2.75	450			0.52			60		7	12	Torpedo Ladle Car
ACS	7	3.01	690	0.1		0.62			73		8	8	Open Ladle Car
ACB	7	2.92	800	0.2		0.55			66		12	8	Open Ladle Bottom
ACPR-W	7	2.90	510	0.9		1.01			56		7	13	Charging Ladle
ASC-15EB	6	2.90	400						65		5	15	EAF Tap-hole
Al_2O_3-MgO-C / Al_2O_3-C Bricks													
UC-1	5	3.00	450		1.5	0.90			30	50		13	Teeming Ladle Metal Line
UC-2	5	3.10	400		1.5	0.80			50	32		12	Teeming Ladle Metal Line
UC-3	6	3.00	450		1.2	0.70			55	23		11	Teeming Ladle Metal Line
UC-4	6	3.10	500		1.2	0.70			62	18		9	Teeming Ladle Metal Line
UC-B	10	2.85	550		1.0	0.65			70	10		7	Teeming Ladle Bottom
UNS	10	3.10	900			0.80			85	-		3	Ladle Well Block
MgO-C Bricks													
UMC-1	3	2.88	350			1.00				73		18	BOF, EAF
UMC-2	3	2.90	330		0.5	1.00				75		17	BOF, EAF
UMC-3	2	3.00	450							76		16	BOF, Ladle S/L
UMC-4	3	2.95	300		0.6	1.10				77		16	EAF, Ladle S/L
UMC-5	4	2.97	350		0.4	1.05				79		14	
UMC-6	5	2.99	400		0.4	1.00				81		12	
UMC-7	6	3.01	450		0.3	0.95				83		10	
UMC-8	7	3.03	400		0.3	0.95				85		8	Ladle S/L

■ AP : Apparent Porosity ■ BD : Bulk Density ■ CCS : Cold Crushing Strength ■ CA : Chemical Anaysis ■ MOR : Modulus Of Rupture ■ PLC : Permanent Linear Change
■ TE : Thermal Expansion ■ TC : Thermal Conductivity ■ RUL : Refractoriness Under Load

*The above table indicates the standard quality of our products.

Acid Proof Bricks

	Water absorption	BD	CCS	Al_2O_3	SiO_2	Fe_2O_3	Main Applications
	%	g/cm³	kg/cm²	%	%	%	
Acid Proof Bricks							
AC-1	0.3	2.20	1,200	18	76	0.5	Acid proof
AC-2	1.2	2.15	1,000	18	76	0.5	Acid proof
AH-1	2.5	2.15	900	23	68	0.7	Acid proof & Heat resistant
AH-2	4.5	2.10	800	23	68	0.8	Acid proof & Heat resistant
AH-3	6.0	2.10	800	24	68	1.2	Acid proof & Heat resistant
AH-4	7.0	2.15	700	26	66	1.5	Acid proof & Heat resistant
AH-5	7.0	2.18	700	26	66	1.5	Acid proof & Heat resistant

■ AP : Apparent Porosity ■ BD : Bulk Density ■ CCS : Cold Crushing Strength ■ CA : Chemical Anaysis ■ MOR : Modulus Of Rupture ■ PLC : Permanent Linear Change
■ TE : Thermal Expansion ■ TC : Thermal Conductivity ■ RUL : Refractoriness Under Load

Insulating Fire Bricks

	Reheating Shrinkage less than	AP	BD	CCS	PLC (1,500℃)	TE (1,000℃)	TC (350℃)	Al_2O_3	Fe_2O_3	Main Applications
	2.0%(0.5%)	%	g/cm³	kg/cm²	%	%	kcal/m.h.℃	%	%	
Insulating Fire Bricks										
A-1	900		0.50	5			0.13			Various Furnace
A-2	1,000		0.50	5			0.14			
A-3	1,100		0.50	5			0.15			
A-4	1,200		0.55	8			0.16			
A-5	1,300		0.66	8			0.17			
A-6	1,400		0.70	10			0.20			
A-7	1,500		0.75	10			0.22			
B-1	900		0.70	25			0.17			
B-2	1,000		0.70	25			0.18			
B-3	1,100		0.75	25			0.20			
B-4	1,200		0.80	25			0.22			
B-5	1,300		0.80	25			0.23			
B-6	1,400		0.90	30			0.27			
B-7	1,500		1.00	30			0.31			Various furnace expose and back up lining
C-1	1,300		1.10	50			0.30			Higher compression Strength then Group A,B Characterized high
C-2	1,400		1.20	70			0.38			under load bearing capacityrather than other insulating materials
C-3	1,500		1.25	100			0.45			and recommended by spots where under load part or abrasion
LW-20	(1,200)		0.50	6			0.15		1.0	
LW-23	(1,300)		0.55	8			0.16		1.0	
LW-24	(1,400)		0.75	10			0.20		1.0	Various Furnace inside lining
LW-28	(1,500)		0.80	10			0.23		1.0	
LW-30	(1,550)		0.90	15			0.26		1.0	
HL-15	(1,500)		1.00	40		0.45	0.40	55	0.5	High temperature Furnaces and Various Furnaces
HL-16	(1,600)		1.10	50		0.47	0.40	65	0.5	
HL-18	(1,800)		1.50	150		0.63	0.90	90	0.5	
IC-RK	(1,350)		1.60	200		0.55	0.60	30	2.0	Cement Plant
IC-S	(1,350)		1.70	220		0.55	0.60	35	2.0	

*The above table indicates the standard quality of our products.

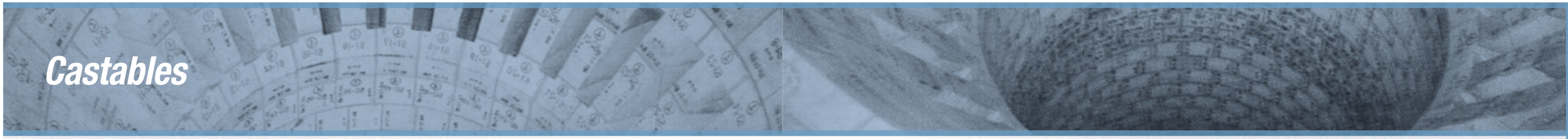

Castables

	Max.Limited Temperature	Material Required for Estimating	CA							PLC					BD				CCS				M.O.R				Instal lations	Main Applications
			Al_2O_3	SiO_2	CaO	SiC	Cr_2O_3	ZrO_2	MgO	110˚C	1,000˚C	1,400˚C	1,500˚C			110˚C	1,000˚C	1,400˚C	1,500˚C	110˚C	1,000˚C	1,400˚C	1,500˚C	110˚C	1,350˚C	1,400˚C	1,500˚C		
	˚C	kg/m3	%	%	%	%	%	%	%	%	%	%	%			g/cm^3	g/cm^3	g/cm^3	g/cm^3	kg/cm^2	kg/cm^2	kg/cm^2	kg/cm^2	kg/cm^2	kg/cm^2	kg/cm^2	kg/cm^2		
Al_2O_3-SiC-C Castable																												
GTR-AU3			55	3		37(SiC+C)				-0.04			0.25			2.90			2.90	100			800					Casting	Main runner (Slag line)
GTR-AU3S			15	2		70(SiC+C)				-0.04			0.05			2.50			2.50	90			650					Casting	Main runner (Slag line)
GRSP-S			46			49(SiC+C)				-0.1			0.16			2.66			2.61	200			930					Casting	Main runner (Slag line)
GTR-AU1			70	2		18(SiC+C)			2	-0.04			0.75			2.85			2.78	200			300					Casting	Main runner (Metal line)
GRSP-M			79			16(SiC+C)			4	-0.02			-0.01			2.86			2.84	480			650					Casting	Main runner (Metal line)
GTR-SR			58			22(SiC+C)										2.65			2.61	220			830					Casting	Slag runner
GIR			72	8		15										2.60			2.50	190			595					Casting	Iron runner
GRSP-SB20			79			23(SiC+C)				-0.02			0.2			3.00			2.96	350			720					Casting	Main runner (Single Lining)
GGM-20			63	15		15(SiC+C)				-0.53			0.35			2.25			2.20	180			360					Gunning	Main Runner Repair
GSC-ACSPH4			75			15(SiC+C)				-0.09			-0.26			3.00			2.98	470			1,310					Gunning	Main Runner Repair
Stack Gunning																												
BF-SG			58	37	3					-0.06	-0.19					2.50	2.48			455	530							Gunning	
SC-A60S			61	37						-0.09		0.37				2.28		2.2		200		1,270						Gunning	

■ AP : Apparent Porosity ■ BD : Bulk Density ■ CCS : Cold Crushing Strength ■ CA : Chemical Anaysis ■ MOR : Modulus Of Rupture ■ PLC : Permanent Linear Change
■ TE : Thermal Expansion ■ TC : Thermal Conductivity ■ RUL : Refractoriness Under Load

*The above table indicates the standard quality of our products.

Castables

	Max. Limited Temperature	Material Required for Estimating	CA					PLC				CCS							M.O.R				Installations	Main Applications
			Al_2O_3	SiO_2	CaO	ZrO_2	MgO	110˚C	1,350˚C	1,400˚C	1,500˚C	110˚C	1,000˚C	1,350˚C	1,450˚C	1,500˚C			110˚C	1,000˚C	1,350˚C	1,500˚C		
	˚C	kg/m³	%	%	%	%	%	%	%	%	%	kg/cm²	kg/cm²	kg/cm²	kg/cm²	kg/cm²			kg/cm²	kg/cm²	kg/cm²	kg/cm²		
High Alumina Castables																								
HACT-180	1,800	2,850	93					-0.03	-0.10	-0.20		340				500			80			100	Casting, Troweling	Volum Stability Abrasion Resistance, Gas resistance High Temperature. Furnace and Incinertor
HACT-180G	1,800	2,650	92					-0.06	-0.25			270		400					80		90		Spray	High Strength, Abrasion Resistance
HACT-170	1,700	2,350	65	30				-0.03	-0.20	-0.35		250				400			50			70	Casting, Troweling	Spalling Resistance
HACT-165	1,650	2,250	58	36				-0.06		-0.30		250		350					50		80		Casting, Troweling	Spalling Resistance, Corrosion Resistance. Various and Torp edo Car
HACT-165G	1,650	2,350	60	23				-0.06	1.00			150		150					40		50		Spray	High Strength
HACT-160	1,600	2,200	53	40				-0.06	-0.10			200		200					60		60		Casting, Troweling	General uses. Spalling Resistance, Abrasion Resistance
HACT-155	1,550	2,150	48	44				-0.06	+0.50			250		250					50		60		Casting, Troweling	High Strength, Repair on the, HeatProcess
HACT-150S	1,500	2,150	48	43				-0.06	-0.40			300		200					60		70		Casting, Troweling	General uses, Abrasion Resistance
HACT-150	1,500	2,100	45	47				-0.06		-0.40		200		200					40	40	50		Casting, Troweling	General uses, Spaling Resistance
CTC-85TD			86	10				0.00			0.60	650				1,100			100			220	Casting, Vibrating	Tundish
CTC-65SH			65	27				0.00			0.54	600				800			150			200	Casting, Vibrating	Tundish
CTC-63TD			64	31				0.00			0.98	200				500			80			180	Casting, Vibrating	Tundish
CTC-60TD			61	34				0.00			1.75	200				400			30			90	Casting, Vibrating	Tundish
TD-R75			75	20				0.00			0.10	80				250			40			100	Thoweling	Thoweling
IMCS-F			62																					BF Between stave and shell(Back fill)
USC-HB90G			89	2								1000											Spray	Reactor Dome
METEOR-90HS			92	6																			Casting, Troweling	BF Ceramic pad at the top of hearth
Fireclay Castables																								
CT-140S	1,400	2,000	43	44				-0.09	-1.20			160		200					40		50		Casting, Troweling	General uses, Abrasion Resistance
CT-140	1,400	1,850	36	54				-0.09	-0.30			150	200	200					40	50	40		Casting, Troweling	General uses
TG-65			65	27				-0.05			-0.35					100						40	Gunning, Troweling	Tundish Coating
TG-55			58	38				-0.80							150								Gunning, Troweling	Tundish Coating
TAST-170			72					0.00			-0.80					250							Gunning, Troweling	Tundish Coating
TAST-160			45					-0.50			-1.20					300						60	Gunning, Troweling	Tundish Coating
BFSG			58	34	3							456											Spray	MG Dome, Front of stave
Alumina-Magnesia																								
CTL-AM-1			90				8	-0.06			1.75	380			850								Casting, Troweling	Ladle Wall
PCT-AM-1			90				5	-0.40				115			165	180							Thoweling	2nd Refaining Meterial
Alumina-Spinel																								
CTL-ASP-S			95				3	0.00			0.20	340				590							Casting, Vibrating	Ladle Wall
CTL-ASP-N			91				6	0.00			0.20	320				610							Casting, Vibrating	Ladle Wall
CTL-ASP-B			91				6	0.00			0.50	450				850							Casting, Vibrating	Ladle Bottom
CTL-ASP-RF			91				6	-0.06			0.60	420				540							Casting, Vibrating	Ladle Wal & Bottom Rapid Fire Heating
CTL-ARS			97				1	0.00			0.18	328				261							Casting, Vibrating	Ladle Wall
CTL-CGB			75				1	-0.03			2.36	100				300							Casting, Vibrating	Ladle Wall
Alumina-Magnesia-Spinel																								
CTL-VBC			87				8	-0.06			1.35	300				950							Casting, Vibrating	Ladle Bottom
Semi Zircon																								
CTL-Z1						47		0.00			3.25	200				350							Casting	Ladle Wall
CTL-Z2						42		-0.06			3.50	170				340							Casting	Ladle Wall

■ AP : Apparent Porosity ■ BD : Bulk Density ■ CCS : Cold Crushing Strength ■ CA : Chemical Anaysis ■ MOR : Modulus Of Rupture ■ PLC : Permanent Linear Change
■ TE : Thermal Expansion ■ TC : Thermal Conductivity ■ RUL : Refractoriness Under Load

*The above table indicates the standard quality of our products.

Castables

	Max. Limitd Temperature	Mererial Required for Estimating	CA							PLC				BD					CCS					M.O.R		Installations	Main Applications
			Al_2O_3	SiO_2	CaO	SiC	Cr_2O_3	ZrO_2	MgO	110℃	1,350℃	1,400℃	1,500℃	110℃	1,450℃	1,500℃			110℃	1,350℃	1,400℃	1,450℃	1,500℃	110℃	1,500℃		
	℃	kg/m³	%	%	%	%	%	%	%	%	%	%	%	g/cm³	g/cm³	g/cm³			kg/cm²	kg/cm²	kg/cm²	kg/cm²	kg/cm²	kg/cm²	kg/cm²		
Special SiC Castable																											
SCX-90 I		2,600				90				0.00									400		1,000					Casting, Spray	Incinerator
SCX-85 I		2,600				85				0.00									350							Nozzle Mixing	Incinerator
SCX-70 I		2,600				70				0.00									300							Liquid Binder	Incinerator
SCX-60KL		2,450	13			60				0.00		-0.20							800		1,200					Casting, Vibrating	Cement Plant
SCX-30KL		2,300	34			32				0.00		-0.30							700		1,000					Casting, Vibrating	Cement Plant
SCX-16KL		2,400	53			16				0.00		-0.30							400		900					Casting, Vibrating	Cement Plant
RA-30S		3,000	65			28				-0.03			-0.60						1,200				1,200			Casting, Vibrating	Cement Plant, Incinerator
RA-10S		3,200	84			10				-0.04	0.05								1,000	1,200						Casting, Vibrating	Cement Plant, Incinerator
HRS-UL20		2,500	50			16				-0.03	0.45								350	400						Casting, Vibrating	Cement Plant, Incinerator
HRS-UL7S		2,550	40			24				-0.04			0.70						350				750			Casting, Vibrating	Cement Plant, Incinerator
UL-SiC			5			78(SiC+C)														900							Blast Furnace, Finex
Al_2O_3-SiC-C																											
SMR-M			76	3		16(SiC+C)			3	-0.03				2.79	2.69				165		137			32		Casting, Vibrating	Cast house
SMR-M1			73	2		18 (SiC+C)			3	0.30			0.13	2.84		2.82			201			450		38	96	Casting, Vibrating	Cast house
SMR-S			55	5		38 (SiC+C)				-0.30				2.64	2.62				146		735			37		Casting, Vibrating	Cast house
SMR-S1			43	3		48 (SiC+C)				0.01			0.10	2.63		2.65			190			1,100		38	155	Casting, Vibrating	Cast house
SMR-S2			28	4		64 (SiC+C)				-0.05				2.37	2.35				84		595			23		Casting, Vibrating	Cast house
SMR-A			71			22 (SiC+C)				-0.02			0.34	2.99		2.99			272			820		53	127	Casting, Vibrating	Cast house
SIR-1			70	10		12 (SiC+C)				-0.02			0.03	2.66		2.61			183			627		38	128	Casting, Vibrating	Cast house
SSR-1			66	11		16 (SiC+C)				-0.02			0.04	2.66		2.62			230			950		50	170	Casting, Vibrating	Cast house
STR-1			75	2		12 (SiC+C)			6	-0.03			1.97	2.93		2.74			245			520		37	121	Casting, Vibrating	Cast house
SWS-1			77							-0.02			-0.09	2.97		2.96			447				700	102	118	Wet Type Spray	Various furnace
SDS-1			58	16						-0.52				2.19	2.18				140			345		90		Dry Type Spray	Various furnace
Chrome Castables																											
WMCT-10CR	1,700	3,150	82				10			-0.03			-0.15						300				980	145	283	Casting, Vibrating	Incinerator(Melting)
WMCT-20CR	1,800	3,250	77				19			-0.03			0.40						460				1,400	100	300	Casting, Vibrating	Incinerator(Melting)
WMCT-30CR	1,900	3,150	63				28			-0.04			0.10						340				1,100	63	160	Casting, Vibrating	Incinerator(Melting)
WMCT-80CR	2,000	3,650	12				77	6		-0.03			-0.20						350				850	80	200	Casting, Vibrating	Incinerator(Melting)

■ AP : Apparent Porosity ■ BD : Bulk Density ■ CCS : Cold Crushing Strength ■ CA : Chemical Anaysis ■ MOR : Modulus Of Rupture ■ PLC : Permanent Linear Change
■ TE : Thermal Expansion ■ TC : Thermal Conductivity ■ RUL : Refractoriness Under Load

*The above table indicates the standard quality of our products.

Castables

	Max. Limited Temperature	Material Required for Estimating	CA				PLC					CCS							M.O.R					Installations	Main Applications
			Al_2O_3	SiO_2	CaO	SiC	110˚C	1,000˚C	1,350˚C	1,400˚C	1,500˚C	110˚C	1,000˚C	1,350˚C	1,400˚C	1,500˚C			110˚C	1,000˚C	1,350˚C	1,400˚C	1,500˚C		
	˚C	kg/m³	%	%	%	%	%	%	%	%	%	kg/cm²	kg/cm²	kg/cm²	kg/cm²	kg/cm²			kg/cm²	kg/cm²	kg/cm²	kg/cm²	kg/cm²		
Dense & High-Strength Castable : Superdens																									
HSC-18SC	1,800	3,250	93	3	2		-0.03				-0.43	1,300	1,400						220	300				Vibrating	Cement Kiln, Hot blast furnace, COKE Oven, etc Various furnace
HSC-18RA	1,800	3,200	90		2	5	-0.06				-0.30	1,000	1,100						200	250					
Dense & High-Strength Castable : Credens																									
HSC-18	1,800	3,200	90	-	2		-0.06				-0.30	800	900						200	240			350	Casting, Vibrating	Cement Kiln, Hot blast furnace, COKE Oven, etc Various furnace
HSC-17	1,700	2,750	75	20	2		-0.05				-0.40	650	680						110	120			130		
HSC-85AL	1,700	2,900	85	8	-		-0.03					53	680						100	120					
HSC-16H-W2	1,600	2,560	57	38	2		0.00		-0.15			900	950						180	200					
HSC-16S-W2	1,600	2,640	65	30	1		-0.02		-0.03			920	110						200	180					
HSC-16SF-W2	1,600	2,360	40	55	2		-0.03		-0.09			770	900						150	130					
HSC-16H-W2	1,600	2,700	57	38	2		-0.03				0.50	800	920						180	250			270		
HSC-16	1,600	2,600	55	40	2		-0.04				0.50	610	630						100	110			120		
HSC-15	1,500	2,400	50	45	2		-0.05		-0.05			450		450					100		100				
HSC-FBW	1,600	2,500	56	38	4		-0.03		-0.50			1,000	1,500						230	250					
HSC-15G	1,500	2,200	50	45	2		-0.10		-0.20			400		350					50		60			Spray	
USC-DC10		1,500	91																						Finex Reactor
Special High Density, Corrosion Resistance Castable																									
MMCT-95	1,800	3,100	95				0.00		0.06		0.40	400		750		800			75		150		150	Casting, Vibrating	Ladle, RH-OB Snorkel, Others
MMCT-85	1,700	2,800	85	3			-0.03		-0.10		0.40	400		700		800			75		100		150	Casting, Vibrating	
MMCT-75	1,600	2,500	75	10			-0.06		-0.15		0.30	350		600		900			70		100		200	Casting, Vibrating	
LPCT-18PI	1,800	3,200	93	3			0.00		0.50		1.62	350		720		850			70		100		190	Casting, Vibrating	P.I Lance Slag Zone, Others
LCPT-17PI	1,700	2,900	87	10			0.00		-0.09		0.56	500		800		700			110		170		150	Casting, Vibrating	P.I Lance Metal Zone, Others
BLC	1,750	2,800	87	7			-0.03		-0.19		1.00	850		950		1,000			120		150		170	Casting, Vibrating	Bubbling Lance
TCH-165Y	1,600	2,670	75	15			-0.03		0.12		0.10	400		600		700			70		90		110	Casting, Vibrating	Torpedocar
Self Leveling Castable																									
SFC-90SC	1,800	3,100	95	4			-0.03	-0.10		-0.35		950	1,000		1,100				170	230		240		Self Leveling	Cement Klin, etc.
SFC-90W	1,800	3,200	95	4			-0.03	-0.10		-0.35		100	1,100		1,150				180	240		250		Self Leveling	
SFC-90SC	1,800	3,050	87	5		5	-0.03	-0.06		-0.09		800	900		1,000				150	220		230		Self Leveling	
SFC-UL90S	1,800	3,200	87	6		5	-0.03		-0.30	-0.15		650	950		1,100				100	250		280		Self Leveling	
SFC-70R	1,700	2,480	75	17			-0.03	-0.06				52	420	760					100	70	150			Self Leveling	
SFC-165	1,650	2,450	61	34			-0.03		0.12			550	800	850					110	120	130			Self Leveling	
SFC-85	1,800	2,800	85	4		3	-0.03			0.60		750			-1,300				120			230		Self Leveling	
SFC-70R		2,610	18			73	-0.03	-0.09	-0.15			530	900	1,200					100	200	250			Self Leveling	
SFC-60		2,570	22			63	-0.03	-0.09	-0.13			500	850	1,100					90	180	230			Self Leveling	

■ AP : Apparent Porosity ■ BD : Bulk Density ■ CCS : Cold Crushing Strength ■ CA : Chemical Anaysis ■ MOR : Modulus Of Rupture ■ PLC : Permanent Linear Change
■ TE : Thermal Expansion ■ TC : Thermal Conductivity ■ RUL : Refractoriness Under Load

*The above table indicates the standard quality of our products.

Pre-Cast Block

Ramming & Gunning Mix

Pre-Cast Block

	CA				CCS	AP	Casting Method			Characteristics	Main Applications
	Al_2O_3	SiO_2	SiC	MgO		1,000˚C					
	%	%	%	%	kg/cm²	%					
EAF Block											
VSB-A80	80		12		450		Vacuum-Casting			Resistance to Abrasion, Resistance to Corrosion	Electric Furnace Spout
CER-90S	93			3	400		General Casting			Resistance to Abrasion, Resistance to Corrosion	Special Refining Furnace, Roof
HTR-MH	93			4	500		General Casting			Resistance to Abrasion, Resistance to Corrosion	High Temperature Works, roof
Tundish Dam Block											
TMD-160	65	29			500		General Casting			Resistance to Corrosion, Anti-spalling	Tundish Special uses, Dam block
TPB-1	63	28			700		General Casting			Resistance to Corrosion, Anti-spalling	Tundish Special uses, Dam block
TD-M80	15			74	650		General Casting			Resistance to Corrosion	Tundish Special uses
General Block											
HSC-16HW	55	38			700		General Casting			Resistance Spalling, Co Gas	Cokes Door
CDB	40	56			55		General Casting			Resistance Spalling, Co Gas	Cokes Door
SB-C			85		600		General Casting			Resistance to Abrasion, Anti-spalling	Aluminium, Copper, Melting Furnace
ALB-65I	50	45			400		General Casting			Resistance to Abrasion, Anti-spalling	Aluminium, Copper, Melting Furnace
Tuyere Block											
UF-WBA	86		14(SiC+SiALON)			4.5					

Ramming & Gunning Mix

	Max. Limited Temperature	Material Required for Estimating	CA					PLC			BD						CCS			M.O.R	TC				Main Applications
			Al_2O_3	SiO_2	ZrO_2	MgO	CaO	110˚C	1,350˚C	1,500˚C	110˚C	1,450˚C	1,500˚C			110˚C	1,450˚C	1,500˚C	110˚C	1,350˚C	1,500˚C	110˚C	1,350˚C	1,500˚C	500˚C	1,000˚C	
	˚C	kg/m³	%	%	%	%	%	%	%	%	g/cm³	g/cm³	g/cm³			%	%	%	kg/cm²	kg/cm²	kg/cm²	kg/cm²	kg/cm²	kg/cm²	kcal/m.h.˚C	kcal/m.h.˚C	
RA-901	1,800	3,150	90	8				-0.05	-0.25	0.15									500	600	700	80	150	200	1.21	1.36	Highrenght Volume stability Corrosion, Spalling Resistance Electric arc Furnace roof
RA-805	1,750	2,850	75	15				-0.30	0.65	2.50									200	400	400	60	80	80	1.18	1.31	Corrosion Resistance Volume Stability Spalling Resistance Tundish Electric arc Furnace roof
RA-806	1,750	2,700	85	6				-0.10	-0.20	-0.50									250	350	400	60	70	90	1.18	1.31	Corrosion Resistance Volume Stability Spalling Resistance Tundish Electric arc Furnace roof
RZ-175	1,750	3,200		35	57			-0.20	0.30	0.50									200	300	200	50	60	50	1.22	1.38	Corrosion Resistance Slag Resistance Ladle
RZ-175G	1,750	3,300		35	59			-0.20	-0.45	-1.00									200	300	500	50	60	100	1.25	1.40	Corrosion Resistance Volume Stablility Glass Melting Furnace
ZRPT	1,700	3,100		40	55			-0.20	-0.50	-1.00									150	250	350	30	60	70	1.20	1.30	Corrosion Resistance Slag Resistance Tundish
ZRPG	1,800	3,100		35	57			-0.06	-0.20	-0.40									150	200	350	30	50	60	1.16	1.30	Corrosion Resistance Volume Spalling Resistance Glass Melting Furnace
ZT-100	1,750	3,200		33	65					-0.42														75	1.20	1.30	Corrosion Resistance Volume Stability Glass Melting Furnace -Bottom Paving
UDT-490	1,800	3,000	88			10																					Corrosion Resistance Volume Stability Induction Furnace-Lining Dry Stamp
UDT-SZ80	1,700	2,200	85		10																						Corrosion Resistance Volume Stability Induction Furnace-Lining Dry Stamp
DVM-595	1,700	3,000	95	2				-0.06	-0.09	0.10									70	100	150				1.37	1.50	Corrosion Resistance Volume Stability Induction Furnace
DVM-C90	1,700	3,000	92	3				-0.05	0.20	0.60									70	500	400				1.47	1.62	Corrosion Resistance Volume Stability Copper melting Furnace
WRM-595	1,800	3,100	95	2				-0.05	0.30	0.50									100	400	400				1.43	1.55	Corrosion Resistance Volume Stability Induction Furnace-Bath
WRM-C90	1,700	2,950	90	8				-0.05	0.60	0.50									100	400	400				1.45	1.60	Corrosion Resistance Volume Stability Induction Furnace-Bath
SRM-2			20	42	25(SiC+C)			-0.21		3.50	2.20		1.89			15		28	280		100	84		40			Ramming of runner
SRM-3			24	44	20(SiC+C)			-0.22		4.00	2.23		1.90			15		27	240		116	70		39			Ramming of runner
CAB-RAMP				4	84(SiC+C)																						BF Hearth wall, taphole stamp
MAGCAST-95						93				0.20	2.72								170								EAF Bottom
DOLCAST-65						67	27																				EAF Bottom
EAF-85G						87																					EAF Hot repair
EAF-65G				28		68																					EAF Hot repair

■ AP : Apparent Porosity ■ BD : Bulk Density ■ CCS : Cold Crushing Strength ■ CA : Chemical Anaysis ■ MOR : Modulus Of Rupture ■ PLC : Permanent Linear Change
■ TE : Thermal Expansion ■ TC : Thermal Conductivity ■ RUL : Refractoriness Under Load

*The above table indicates the standard quality of our products.

Plastic Refractories

	Max Limited Temp ℃	Material Requires for Estimating (kg/cm³)	CA (%)		PLC (%)					CCS (kg/cm²)			M.O.R (kg/cm²)			TC (kcal/m, hr, ℃)		Main Applications
			Al_2O_3	SiO_2	110℃x24hrs	1,350℃x3hrs	1,500℃x3hrs			110℃x24hrs	1,350℃x3hrs	1,500℃x3hrs	110℃x24hrs	1,350℃x3hrs	1,500℃x3hrs	500℃	1,000℃	
High Alumina																		
PTF-180	1,800	3,100	90	8	-0.20	0.15	0.20			150-200	400-500	600-700	30-60	80-100	130-160	1.21	1.36	Abrasive Resistance Corrosion Resistance High Strength Special bond
PTA-180	1,800	2,850	81	13	-0.35	0.15	0.30			50-100	250-350	200-300	10-40	30-60	35-65	1.18	1.31	Corrosion Resistance Spalling Resistance Furnace roof
PTF-175	1,750	2,850	79	13	-0.35	0.10	0.95			50-100	250-350	200-300	10-40	30-60	35-65	1.18	1.31	Corrosion Resistance
PTA-175	1,750	2,600	70	23	-0.35	-0.40	-0.35			50-100	300-400	300-400	10-40	35-65	35-65	1.15	1.32	Volume stability
PT-170	1,700	2,500	63	32	-0.60	-0.10	-0.90			50-100	150-250	200-300	10-40	30-60	35-65	0.88	0.98	High temperature various Furnace
Fireclay																		
PT-165	1,650	2,400	43	50	-0.70	0.30	0.20			50-100	200-300	250-350	10-40	30-60	50-80	0.84	0.91	Spalling resistance Volume stability Heat-setting refractory Ait hardening Various Furnace
PT-160	1,600	2,350	41	53	-0.70	0.00	0.30			30-80	200-300	250-350	5-35	20-50	50-80	0.84	0.91	Spalling resistance Volume stability Various Furnace
PT-150	1,450	2,300	38	54	-0.70	-1.10				30-80	150-250		5-35	30-60		0.81	0.89	Spalling resistance Various Furnace
PT-140	1,400	2,300	35	56	-0.70	-1.20				30-80	150-250		5-35	30-60		0.81	0.89	Various Furnace
Special Material																		
PTC-165	1,650	3,200	(Cr2O3)	28-33	-0.50	-0.95	-0.20			100-200	250-350		50-80	100-130		1.31	1.41	Slag resistance heating furnace Furnace
PTC-130S	1,300	2,900	(Cr2O3)	25-30	-0.50	1300	1.50			70-150	1300	100-180	10-40	1300	40-80	1.36		Dust adhesion prevention Incinerator Tube pacthing
PAC	1,600	2,260	(SiC+C)25	17-23	-1.50	0.65	0.20			30-80	50-100	50-100	5-35	10-40	10-40	0.80	0.88	Corrosion Resistance Cupola Through lectures
TPA	1,750	2,600	73	25	-0.50	0.10	0.85			100-200	300-400	250-450	30-60	100-150	100-150	1.18	1.31	Lance mortar

■ AP : Apparent Porosity ■ BD : Bulk Density ■ CCS : Cold Crushing Strength ■ CA : Chemical Anaysis ■ MOR : Modulus Of Rupture ■ PLC : Permanent Linear Change
■ TE : Thermal Expansion ■ TC : Thermal Conductivity ■ RUL : Refractoriness Under Load

*The above table indicates the standard quality of our products.

Insulating Castable

Acid Proof Castable

Insulating Castable

	Max. Limited Temperature	Material Required for Estimating	CA		PLC				CCS					M.O.R						TC			Installations	Main Applications
			Al_2O_3	SiO_2	110˚C	1,000˚C	1,350˚C	1,500˚C	110˚C	500˚C	1,000˚C	1,350˚C	1,500˚C	110˚C	500˚C	800˚C	1,000˚C	1,350˚C	1,500˚C	260˚C	540˚C	800˚C		
		kg/m³	%	%	%	%	%	%	kg/cm²	%	kg/cm²	kg/cm²	kg/cm²	kg/cm²	kg/cm²	kg/cm²	kg/cm²	kg/cm²	kg/cm²	kcal/m.h.˚C				
Light-Weight Castable																								
INCT-170	1,700	1,750	92		-0.03		-0.50	0.50	150				210	70					80				Casting,Troweling	Deoxidizing gas resistance High temp
INCT-160	1,600	1,600	63	28	-0.03				150				240	45					90	0.52	0.57	0.62	Casting,Troweling	High temperature
INCT-140	1,400	1,350	50	36	-0.06	-0.25			55		40	40		30			30			0.34	0.38	0.42	Casting,Troweling	Fireproof insulating
INCT-135S	1,350	900	43	38	-0.06	-0.25			60		75			15			15			0.25	0.28	0.31	Casting,Troweling	High temperature Low thermalconductivity
INCT-135N	1,350	1,400	38	48	-0.06	-0.45			60		20			30			15			0.34	0.38	0.42	Casting,Troweling	High temperature Low thermalconductivity
DC-2BS	1,200	1,200	35	40	-0.09	-1.30	-1.30		33		50	50		15				20		0.3	0.32	0.34	Spray	FINEX
INCT-120S	1,200	900	33	43	-0.06	-0.35			40		40			20			15			0.2	0.24	0.28	Casting,Troweling	High temperature Low thermalconductivity
INCT-120N	1,200	1,200	30	53	-0.06	-0.20			50		35			20			10			0.32	0.36	0.4	Casting,Troweling	High temperature Low thermalconductivity
INCT-110S	1,100	800	30	37	-0.06	-0.80			40		25			10			20			0.14	0.17	0.21	Casting,Troweling	general furnaces
INCT-100N	1,100	1,150	25	55	-0.06	-0.43			50		40			12			15			0.29	0.31	0.35	Casting,Troweling	Low temperature Various furnaces
INCT-100S	1,000	700	30	35	-0.06		-0.80		15		5			8			3			0.13	0.15	0.21	Casting,Troweling	Low temperature Various furnaces
INCT-100N	1,000	1,250	25	50	-0.06		-0.60		70		45			20			10			0.25	0.28	0.31	Casting,Troweling	Low temperature Various furnaces
INCT-80S	800	450	28	38	-0.06		-0.60		6	6				3	3					0.12	0.19		Casting,Troweling	Low temperature Various furnaces
INCT-80N	800	800	20	58	-0.06		-0.30		15	10				5	5					0.14		0.21	Casting,Troweling	Low temperature Various furnaces
INCT-50S	500	900	33	33	-0.06		-0.70		20	20				6	6					(350)	0.19		Casting,Troweling	Duct
iLight-Weight Gunning Castable																								
GUN-140L	1,400	1,500	47	32	-0.15	-0.40			55		25			20			12			0.40	0.42	0.48	Gunning	Fireproof Insulating Part
GUN-135L	1,350	1,450	37	41	-0.10	-0.50			35		20			15			10			0.40	0.42	0.48	Gunning	Fireproof Insulating Part
GUN-120L	1,200	1,300	34	47	-0.10	-0.60			35		30			15			10			0.30	0.32	0.34	Gunning	General Uses
GUN-110L	1,100	1,100	29	39	-0.10	-0.90			30		20			15			9			0.24	0.26	0.28	Gunning	General Uses
GUN-100L	1,000	1,000			-0.20				10					8		3				0.20	0.23	0.24	Gunning	Low Temperature
GUN-80L	800	1,000			-0.20				35	20				20	8					0.20	0.32		Gunning	Low Temperature
MIX-1(1:4)	1,100	1,500			0.00	-0.8			100		55			30			20				0.3	0.45	Gunning,Casting(UOP)	Petrochemical plant Heater, boiler
MIX-2(1:2:4LHV)	1,000	800			-0.20	-1.2			20		10			10			5				0.18	0.23	Gunning,Casting(UOP)	Petrochemical plant Heater, boiler
MIX-3(1:6)	1,000	550			-0.25	-1.8			10		6			5			3				0.13	0.14	Gunning,Casting(UOP)	Petrochemical plant Heater, boiler

Acid Proof Castable

	Max. Limited Temperature	Material Required for Estimating	CA		PLC			CCS			M.O.R			Water Required for Casting		Installations	Main Applications
			Al_2O_3	SiO_2	110˚C	500˚C	1,000˚C	110˚C	500˚C	1,000˚C	110˚C	1,000˚C	1,350˚C				
	˚C	kg/m³	%	%	%	%	%	kg/cm²	kg/cm²	kg/cm²	kg/cm²	kg/cm²	kg/cm²		%		
Acid-Proof Castable																	
APC-120	1,200	2,000	40	55	-0.10	-0.25	-0.50	120	300	350	50	80	100	Water Glass	15	Casting, Vibrating	Chemical Plant
APC-80	800	1,900	30	65	-0.10	-0.30		120	250		45	60			15	Casting, Vibrating	
APC-50	500	1,850	25	70	-0.20			140	200	300	75	90			18	Casting, Vibrating	
APC-120G	1,200	2,200	42	53	-0.10	-0.40	-0.60	80	250		30	70	100			Spray	
APC-100G	1,000	2,200	18	69	-0.20	-0.30		250	280		70	80				Spray	
APC-80G	800	2,100	27	68	-0.10	-0.50		70	200		25	55				Spray	
APC-50G	500	2,050	31	62	-0.20			120	180		70	80				Spray	

■ AP : Apparent Porosity ■ BD : Bulk Density ■ CCS : Cold Crushing Strength ■ CA : Chemical Anaysis ■ MOR : Modulus Of Rupture ■ PLC : Permanent Linear Change
■ TE : Thermal Expansion ■ TC : Thermal Conductivity ■ RUL : Refractoriness Under Load

*The above table indicates the standard quality of our products.

Blast Furnace Tap-Hole Clay(Mud)

Frame-Gunning Materials

Blast Furnace Tap-Hole Clay(Mud)

	CA						CCS		PLC			Main Applications	Remarks
	Al_2O_3	SiO_2	SiC+C	Si_3N_4	MgO	TiO_2	300˚C	1,500˚C	1,500˚C				
	%	%	%	%	%	%	kg/cm²	kg/cm²	%				
WTM-S	10	43	20					30	-0.50			Electric Furnace	Corrosion Resistance (Stable Taphole Length)
WTM-M	3	6	10		76		130	64	0.42			Electric Furnace	Corrosion Resistance (Stable Taphole Length)
WTM-T1	26	39	29	9			138	140	-0.26			Blast Furnace	Excellent Corrosion Resistance (High Taphole Time & Length)
WTM-T2	21	44	27	13			146	138	-0.05			Blast Furnace	Excellent Corrosion Resistance (High Taphole Time & Length)
WTM-T3	12	41	31	22			185	118	0.19			Blast Furnace	Excellent Corrosion Resistance (High Taphole Time & Length)
WTM-F	59	9	9	5				700	-0.50			COREX/FINEX	Hot Metal/Slag Resistance(Stable Taphole Length)
WTM-R	20	18	25	22				120	0.50			Blast Furnace	Rapid heating(Stable Taphole Length)
WTM-C	10	22	24	20		7		150	0.50			Blast Furnace	Hearth temperature(TiO2 Taphole Clay)
WRM	13	30	26	23			300	110	-0.34			Blast Furnace	Resin Mud
HK-2	60	7	8										Finex taphole clay

Frame-Gunning Materials

	CA							Refratoriness			Grain Size	Gunning layer at 1,650˚C				Main Application
	SiO_2	Al_2O_3	CaO	MgO	Na_2O	Fe_2O_3	Cr_2O_3					AP	BD	AD	CCS	
	%	%	%	%	%	%	%	˚C			mm	%	g/cm³	g/cm³	kg/cm²	
FSS95	97	1	1		0.8	0.2		1,690			0.2	12	2.01	2.26	200	Coke Oven
FRS80	81	5	2		Si, 9	0.5		1,640			0.7	27	1.47	2.02	400	Coke Oven & Glass Melting Tanks
FAM-1		89						1,800			0.149	22	2.92	3.73	470	RH Furnace & Ladle
FAM-2		84		4		2	4	1,800			0.149	21	2.92	3.72	820	RH Furnace & Ladle

■ AP : Apparent Porosity ■ BD : Bulk Density ■ CCS : Cold Crushing Strength ■ CA : Chemical Anaysis ■ MOR : Modulus Of Rupture ■ PLC : Permanent Linear Change
■ TE : Thermal Expansion ■ TC : Thermal Conductivity ■ RUL : Refractoriness Under Load

*The above table indicates the standard quality of our products.

Mortar

Brand	Refractoriness	CA						Bonding Strength				Grain Size			Setting Time	Main Applications
		Al_2O_3	SiO	SiC	SiC+C	ZrO	FeO	110℃	1,000℃	1,400℃	1,500℃	+0.5mm	+0.3mm	-0.075mm		
	SK	%	%	%	%	%	%	kg/cm²	kg/cm²	kg/cm²	kg/cm²	%	%	%	min	
AM-1	37	75	15					15			100				1-2	H1, H21, H23, S25, Blast furnace stove
AM-BFC	37	70						20			80				2-3	MUL-1,SIL-2, Blast furnace
AM-4B	36	58	30					15		50					2-3	SF35, Blast furnace
AM-4A	36	55	36					15		60					2-3	SF35, Blast furnace
MN-1	33	45	45					15		80					1-2	N2, N3, Blast furnace stove
MN-2	31	36	56					15		40					1-2	N3, Blast furnace
SMC				90				20		70					2-3	SSB-2, Blast furnace stove
AMO 1P	38		88					25		70					2-3	AS-1, Iron runner
IMO-1	31							10	40						2-3	LBK23, LBK28, Blast furnace stove
IMO-3	31							10	30						2-3	B1, B2, Blast furnace stove
IMO	36							15		20					2-3	1,500 Insulating
SM-1	27		87≦										5≧	55≦		High silica ladle brick
SM-2	30		90≦										10≧	50≦		
ZM-1	35					55≦		20	15	40			20≧	50≦		Zircon ladle brick
ZM-2	35					60≦		20	15	40			20≧	50≦		
ASCM-1		60≦			20≦			10		50		2≧		50≦		Topedo car slag line
ASCM-S		70≦			17≦			10		50		2≧		50≦		
GM-1		30≦			33≦			20		50		2≧		50≦		Cupola block
SCH-2					85≦			20		50		2≧				
AMCM-1		60≦			20≦			10		50		2≧				High temp. high purity metal
AMCM-2		50≦			30≦			10		50		2≧				
APM-1			60≦					20	10							For Acid-proof bricks
APC-1								10							20-40	For Acid-proof bricks
APC-2								10							20-40	
RAPN			90≦					5				2≧				Coke oven
SSM-1			75≦	20≦				20	20							
MSM-40	40	95					2≧	20			60	2≧		50≦		Phosphate bond mortar
MSM-39	39	90≦						20			60	2≧		50≦		
MSM-38	38	80≦					2≧	20			70	2≧		50≦		
MSM-36	36	70≦					2≧	20			60	2≧		50≦		
SP-85W	39	85≦					2≧	50	60	70		2≧		50≦		General brick incinerator brick
SP-70W	38	70≦					2≧	50	60	70		2≧		50≦		
SP-85W	37	60≦					2≧	45	50	60		2≧		50≦		
SP-60W	36	55≦		12.03.20			2≧	45	45	50		2≧		60≦		General brick
SP-3000	34	45≦					2≧	90	80			2≧		50≦		Brick
SP-3000S	34	45≦					2≧	90	80			2≧		50≦		Sealing
BM-1W								10	10			2≧		50≦		A1-A4, B1-B4, C1-C3
BM-2W								10	20	30		2≧		50≦		A5-A7, B5-B7
BM-3W								10	20	30		2≧		50≦		LW20, LW30, HL16
HSM-38	38	70-75	20-25				3≧					5≧		50≦	1-3	SK38 Brick
HSM-37	37	65-70	25-35				3≧			25		5≧		50≦		SK37 Brick
HSM-36	36	55-60	35-40				3≧			25		5≧		50≦		SK36 Brick
HSM-35	35	50-55	40-45				3≧			25		5≧		50≦		SK35 Brick
HSM-34	34	45-50	45-50				3≧		15	25		5≧		40≦		SK34 Brick
HSM-33	33	40-45	50-55				3≧		15			5≧		40≦		SK33 Brick
HSM-32	32	35-40	55-60				3≧		15			5≧		40≦		SK32 Brick
HSM-31	31	30-35	60-65				3≧		15			5≧		40≦		SK 31Brick
HSM-30	30	25-30	65-70				3≧		15			5≧		40≦		SK31 Brick
ASM-40	40	95					2≧	20			40	10≧		50≦		SK-40 Brick
ASM-39	39	85					3≧	20			40	10≧		50≦		SK-39 Brick
ASM-38	38	75					3≧	20			40	10≧		50≦		SK38 Brick
ASM-37	37	65					3≧	20		40		10≧		50≦		SK37 Brick
ASM-36	36	55					3≧	20		40		10≧		50≦		SK36 Brick
ASM-35	35	50					3≧	20		40		10≧		50≦		SK35 Brick
ASM-34	34	45					3≧	10		30		10≧		50≦		SK34 Brick
ASM-32	32	35					3≧	10	25			10≧		60≦		SK32 Brick
ASM-31	31	30					3≧	10	25			10≧		40≦		SK-31 Brick
BM-1								5	15					30≦		A1-A4, B1-B4, Brick
BM-2								5	7	15				30≦		A5, B5, C5, LW20, LW23
BM-3								5	7	10				30≦		A6, A7, B6, B7, C2, D3, LW24

■ AP : Apparent Porosity ■ BD : Bulk Density ■ CCS : Cold Crushing Strength ■ CA : Chemical Anaysis ■ MOR : Modulus Of Rupture ■ PLC : Permanent Linear Change
■ TE : Thermal Expansion ■ TC : Thermal Conductivity ■ RUL : Refractoriness Under Load

*The above table indicates the standard quality of our products.

Ladle Slide Gate Refractory(Nozzle)

Brand	Materials	AP	BD	CCS	M.O.R (Room temperature)	M.O.R (1,000℃)	TE (1,000℃)			Al_2O_3	SiO_2	ZrO_2	MgO	F.C	SiC	Cr_2O_3	Permeability (at 0.5kg/cm²)	Average Pore Diameter	Main Applications	Remarks
		%	g/cm³	kg/cm²	kg/cm²	kg/cm²	%			%	%	%	%	%	%	%	Nℓ/min	㎛		
CK3-941	Alumina-Carbon	7	3.08	1,100	285	280	0.62			85	4			4					Top Nozzle	Excellent corrosion Resistance
CK3-669		8	2.55	1,000	150	110	0.53			56	31			4						corrosion resistance Spalling resistance
CK3-BT90		5	3.1	1,200	330	340	0.57			91	3			5	1					Excellent corrosion Resistance
CK3-B817	Alumina -MgO-Carbon	8	3.03	800	215	180	0.54			80	2		5	8	-					Excellent corrosion Resistance
CK3-BM07		11	3.13	1,120	150	95	0.78			79	2		6	4	1					Excellent corrosion Resistance
CK3-MC30		8	3.08	1,210	285	120	0.87			59	1		28	5						Excellent corrosion Resistance
CK3-B505		12	2.95	670	200	160	1			43	4		42	4						Excellent corrosion Resistance
CK3-MC80		8	2.97	1,150	140	100	1.36			7	2		80	5						Excellent corrosion Resistance
CK3-718	Alumina -Silica-Carbon	7	2.64	1,100	210	200	0.26			61	27			5					Collector Nozzle	Spalling resistance
CK3-738		9	2.64	860	180	100	0.28			63	23			4						
CK3-846		5	2.77	1,130	310	250	0.44			69	20			4						
CK3-850F		6	2.81	1,120	210	210	0.47			71	17			4						Excellent Spalling resistance
CK3-890F	Alumina-Carbon	7	3	1,120	210	185	0.51			81	8			4						Spalling resistance
CK3-ZSH-1	Zircon-Carbon	8	3.45	1,280	130	210	0.36			6	31	53		4						Special Uses
CK3-ZSH-2		14	3.37	637	125	140	0.35			3	32	57		3						Special Uses
SQUN-MAC	Alumina	26	2.8	700			0.76			87	6	4				2	50	20	Tundish Nozzle (Argon Purging)	Spalling Resistance Corrosion Resistance
SQUN-S01		23	2.5	500			0.65			76	20					2	30	10	Tundish Nozzle (Argon Purging)	Spalling Resistance Small pore size
SQUN-MZ10		21	2.8	1,000			0.61			74	15	9				2	30	10	Tundish Nozzle (Argon Purging)	Spalling Resistance Clogging Resistance Small pore size
SQUN-UNJN		22	2.87	320			0.80			90	7						50	30	Tundish Nozzle (Argon Purging)	Corrosion Resistance

■ AP : Apparent Porosity ■ BD : Bulk Density ■ CCS : Cold Crushing Strength ■ CA : Chemical Anaysis ■ MOR : Modulus Of Rupture ■ PLC : Permanent Linear Change
■ TE : Thermal Expansion ■ TC : Thermal Conductivity ■ RUL : Refractoriness Under Load

*The above table indicates the standard quality of our products.

Ladle Slide Gate Refractory(Plate)

Brand	Materials	AP	BD	CCS	M.O.R (1,500℃)	TE (1,500℃)			Al_2O_3	SiO_2	ZrO_2	MgO	F.C	Main Applications	Remarks
		%	g/cm³	kg/cm²	kg/cm²	%			%	%	%	%	%		
MSCP-C141	Alumina-Zirconia-Carbon	8	3.13	1,830	220	1.00			77	7	7		10	Ladle-SN	Spalling Resistance
MSCP-C142		6	3.17	2,300	240	1.05			78	6	5		10	Ladle-SN	Spalling Resistance Corrosion Resistance
MSCP-C143		6	3.18	2,430	250	1.08			77	6	5		9	Ladle & Tundish-SN	Spalling Resistance Corrosion Resistance Oxydation Resistance
MSCP-C144		8	3.23	2,850	280	1.12			76	4	5		9	Tundish-SN	Corrosion Resistance Oxydation Resistance Abrasion Resistance
MSCP-H701		6	3.14	1,900	450	1.09			80	4	5		9	Ladle & Tundish-SN	Spalling Resistance Corrosion Resistance Oxydation Resistance
MSCP-H702		6	3.20	2,500	600	1.25			91				4	Ladle & Tundish-SN Ca-treated steel	Corrosion Resistance Oxydation Resistance Abrasion Resistance Infiltration Resistance
MSCP-H704		5	3.21	2,700	620	1.22			86	1	2		6	Ladle & Tundish-SN Ca-treated steel	Corrosion Resistance Oxydation Resistance Abrasion Resistance Infiltration Resistance
MSCP-H703	Magnesia Carbon	4	3.03	1,850	380	2.21			13			75	8	Tundish-SN High-Ca-treated steel	Corrosion Resistance Abrasion Resistance
MSCP-M201	Alumina-Carbon	5	3.08	1,700	380	1.18			88	6			5	Tundish-SN	Corrosion Resistance
MSCP-M202		5	3.17	1,900	400	1.30			91	2			5	Tundish-SN	Corrosion Resistance
MSCP-M203	Magnesia-Carbon	8	2.95	1,200	300	2.40			8			82	7	Tundish-SN Insert High Ca-treated steel	Corrosion Resistance
MSCP-S161	Zirconia-Carbon	13	4.85	1,000		1.26					95			Tundish-SN Insert High Ca-treated steel	Corrosion Resistance

■ AP : Apparent Porosity ■ BD : Bulk Density ■ CCS : Cold Crushing Strength ■ CA : Chemical Anaysis ■ MOR : Modulus Of Rupture ■ PLC : Permanent Linear Change
■ TE : Thermal Expansion ■ TC : Thermal Conductivity ■ RUL : Refractoriness Under Load

*The above table indicates the standard quality of our products.

Continuous Casting Nozzles & Tube

Brand	Materials	AP	BD	M.O.R (Room temperature)	Al_2O_3	SiO_2	ZrO_2	MgO	AlN	CaO	F.C		Main Applications	Remarks
		%	g/cm³	kg/cm²	%	%	%	%	%	%	%			
CKL-S18	Alumina-silica-carbon	17	2.37	75	54	18					24		Shroud-Body	Non preheating, Spalling Resistance
CKL-S19	Alumina-silica-carbon	13	2.31	85	44	19					37			Preheating, Spalling resistance, reusable
CKL-S27	Alumina-silica-carbon	15	2.37	80	49	26					24			Preheating, Spalling resistance, Normal
CKL-S20	Alumina-silica-carbon	15	2.38	100	46	16					30		Shroud-Top(Flange)	Anti oxidants, High strength
CKL-S21	Alumina-silica-carbon	17	2.46	65	60	19					19		Shroud-Inner layer(Liner)	Low carbon, Abrasion resistance
CKL-S13	Alumina-silica-carbon	17	2.43	65	59	5					29		Shroud-Slag Line	Non preheaing
CKL-S68	Alumina-carbon	15	2.55	85	65						35			Corrosion Resistance
CKS-S15	Alumina-silica-carbon	16	2.39	70	56	6					29		Stopper-Body	Preheating
CKS-S50	Alumina-silica-carbon	16	2.52	90	50	10	4				31			Low Silica
CKS-C65	Alumina-carbon	14	2.63	150	59	2	7				29			Al casting, Cast-iron casting
CKS-S83	Alumina-carbon	19	2.60	150	66				8		22		Stopper-Nose, SEN-Flange	Normal
CKS-Z72	Zirconia Carbon	17	3.56	106			75			3	16			Corrosion resistance
CKS-S84	Alumina-carbon	14	2.91	180	77						20			Anit clogging, AlN Contained
CKS-SH60	Magnesia-Alumina-Carbon	18	2.61	70	32			46			15			Corrosion resistance
CKS-M81	Magnesia-Carbon	15	2.70	150				80			10		Stopper-Nose Stopper-Slag Line	Normal
CKS-M70	Magnesia-Carbon	14	2.60	110				74			18			Corrosion resistance
CKS-M73	Magnesia-Carbon	13	2.73	200		1		80			9			Corrosion resistance in Ca treated steel
CKS-SP12	Spinel-carbon	14	2.64	107	53			20			17			Corrosion resistance
CKSE-A70	Alumina-carbon	15	2.61	85	66	1					30		SEN-Body	High performace in Ca treated steel
CKSE-A45	Alumina-silica-carbon	14	2.30	65	42	25					31			Non-preheating(for emergency change)
CKSE-A51	Alumina-silica-carbon	15	2.45	85	55	15					30			Corrosion resistance, Spalling resistance
CKSE-Z79	Zirconia Carbon	16	3.57	95			77			3	18		SEN-Slag Line	Corrosion resistance for Mold Powder
CKSE-Z80	Zirconia Carbon	16	3.72	100			80			3	16			High Corrosion resistance for Mold Powder
CKSE-A55	Alumina-silica-carbon	16	2.17	100	39	27					30		SEN-Liner	For prevention against nozzle-clogging
CKSE-F34	Alumina -Magnesia-Carbon	20	2.70	40	70			27			3			High oxygen steel
CKSE-C06	Alumina-silica	20	2.52	40	83	13					3			Errosion resistance
CKSE-AP33	Alumina-silica-carbon	19	2.22	40	45	25	1				29			Permeablel
CKSE-CS12	Calcia-Zirconia-Carbon	19	2.64	75		6	45			21	26			Anti-Clogging
CKSE-CS13	Calcia-Zirconia-Carbon	20	2.60	80		5	48			19	25			Anti-Clogging
CKSE-CS26	Calcia-Zirconia-Carbon	20	2.64	80		13	39			26	20			For prevention against nozzle-clogging
CKS-S15	Alumina-silica-carbon	16	2.39	70	56	6					29		Temperature Measuring Tube-Body	Spalling resistance
CKS-SH60	Magnesia-Alumina-Carbon	18	2.61	70	32			46			15			Corrosion resistance
CKS-M70	Magnesia-Carbon	14	2.60	110				74			18		Temperature Measuring Tube-Slag Line	Corrosion resistance
CKSE-Z79	Zirconia Carbon	16	3.57	95			77			3	18			Corrosion resistance

■ AP : Apparent Porosity ■ BD : Bulk Density ■ CCS : Cold Crushing Strength ■ CA : Chemical Anaysis ■ MOR : Modulus Of Rupture ■ PLC : Permanent Linear Change
■ TE : Thermal Expansion ■ TC : Thermal Conductivity ■ RUL : Refractoriness Under Load

*The above table indicates the standard quality of our products.

Purging Plugs

DPP · MHP

Purging Plugs

Brand	Materials	AP	BD	CCS	M.O.R (Room temperatur)	M.O.R (at 1,000˚C)	TE (1,000˚C)	Al_2O_3	SiO_2	ZrO_2	MgO	F.C	Cr_2O_3			Permeability (at 0.5kg/cm²)	Permeability (at 1.0kg/cm²)	Anerage Pore Diameter	Main Applications	Remarks
		%	g/cm³	kg/cm²	kg/cm²	kg/cm²	%	%	%	%	%	%	%			Nℓ/min	Nℓ/min	㎛		
BPSC-SP90	Alumina-Spinel	17	3.04	850		120	1.4	90.0			4.0					50~150	100~300		Cone	Corrosion Resistance
BPSC-LP12	Alumina-Spinel-Chrome	15	3.20	1,100		150	1.3	90.0			2.0		2.0			50~150	100~300		Cone	Excellent corrosion Resistance Spalling resistance
NCT-90SP	Alumina-Spinel	15	3.05	700		120	1.4	90.0			3.0								Seating Block	Corrosion resistance Spalling resistance
NCT-90AM	Alumina-MgO	18	3.10	500		130	1.3	90.0			4.0								Seating Block	Excellent corrosion Resistance
SQPP-95A	Alumina-Chrome	33	2.65	250			0.90	97	1				2				120	130	Ladle Purging Plug& Lance (Argon Purging)	Corrosion Resistance Good Permeability
PJK-3		25	2.89	900			0.75	92	3				1				100	100	Ladle Purging Plug (Argon Purging)	Corrosion Resistance Good Permeability
PJP-1		24	2.80	1,500			0.85	89	7	2			1				110	110	Ladle Purging Plug (Argon Purging)	Corrosion Resistance Spalling Resistance Good Permeability
SQPP-950		26	2.75	1,033			0.80	87	6	3			2				150	157	Ladle Purging Plug (Argon Purging)	Corrosion Resistance Spalling Resistance Excellent Permeability
SPA-150		26	2.75	1,100			0.82	85	6	3			4				170	175	Ladle Purging Plug (Argon Purging)	Corrosion Resistance Excellent Permeability
SB-AC		19	3.20	1,800			0.80	87	3	3			5						Ladle Purging Plug (Argon Purging)(Segment type)	Corrosion Resistance

DPP · MHP

Brand	Materials	AP	BD	CCS	M.O.R (Room temperature)	M.O.R (1,000˚C)	TE (1,000˚C)	Al_2O_3	SiO_2	ZrO_2	MgO	F.C	SiC	Cr_2O_3			Permeability (at 0.5kg/cm²)	Average Pore Diameter	Main Applications	Remarks
		%	g/cm³	kg/cm²	kg/cm²	kg/cm²	%	%	%	%	%	%	%	%			Nℓ/min	㎛		
EDPP-N1	MgO-Carbon	4.5	3	550							80	14							Plug for Direct purging Plug	Excellent corrosion Resistance
EDPS-N1		4.2	2.95	500							82.5	13							Seating Block for Direct purging Plug	Excellent corrosion Resistance
CMP-N1		4	2.88	500	190						78	18							Multi Hole Plug	Excellent corrosion Resistance

■ AP : Apparent Porosity ■ BD : Bulk Density ■ CCS : Cold Crushing Strength ■ CA : Chemical Anaysis ■ MOR : Modulus Of Rupture ■ PLC : Permanent Linear Change
■ TE : Thermal Expansion ■ TC : Thermal Conductivity ■ RUL : Refractoriness Under Load

*The above table indicates the standard quality of our products.

Technical Data

Temperature Equivalents for Seger Cone

SK	℃	℉	SK	℃	℉	SK	℃	℉
10	1,300	2,372	20	1,530	2,786	35	1,770	3,218
11	1,320	2,408	26	1,580	2,876	36	1,790	3,254
12	1,350	2,462	27	1,610	2,930	37	1,825	3,317
13	1,380	2,516	28	1,630	2,966	38	1,850	3,362
14	1,410	2,670	29	1,650	3,002	39	1,880	3,416
15	1,435	2,570	30	1,670	3,038	40	1,920	3,488
16	1,460	2,615	31	1,690	3,074	41	1,960	3,560
17	1,480	2,660	32	1,710	3,110	42	2,000	3,632
18	1,500	2,696	33	1,730	3,146			
19	1,510	2,732	34	1,750	3,182			

Thermal Conductivities of Refractory

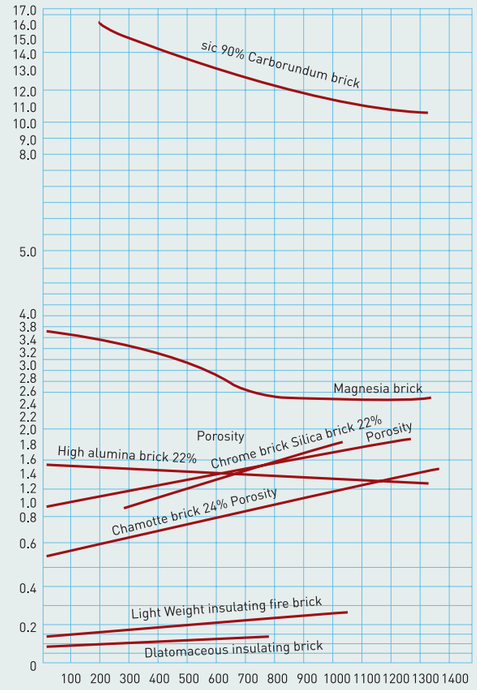

Relation between Refractoriness and Composition in SiO_2-Al_2O_3 System

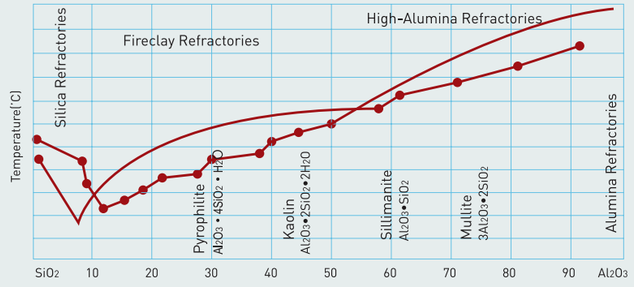

* The above table indicates the standard qualities of our products

Technical Data

The Shape and Size of Firebricks

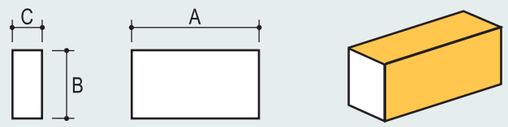

Mark	A	B	C
Dimension	230	114	65

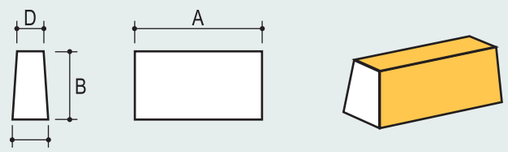

Mark	A	B	C	D
Y1	230	114	65	59
Y2	230	114	65	50
Y3	230	114	65	32

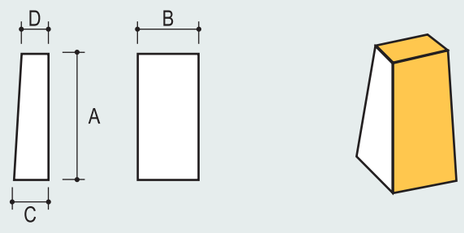

Mark	A	B	C	D
T1	230	114	65	55
T2	230	114	65	45
T3	230	114	65	35

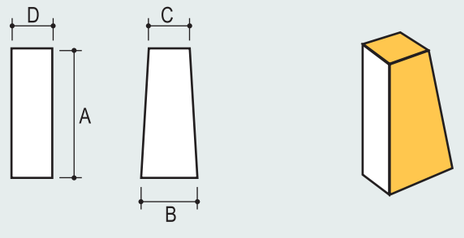

Mark	A	B	C	D
B1	230	114	105	65
B2	230	114	85	65
B3	230	114	85	65

* The above table indicates the standard qualities of our products

The Number of Bricks Required For Installation(Per 1m^2 of the furnace Wall)

Wall Thickness	Classification	1.5mm Joint	3.0mm Joint
65mm	Fire Brick	41	39
114mm	Fire Brick	70	68
230mm	Fire Brick	141	137
344mm	Fire Brick	211	204
460mm	Fire Brick	282	273

The Amount of Mortar Required For Installation(Per 1,000 bricks)

Joint Thickness(mm)	Mortar Volume(m^3)	Weight(kg)
1.5	0.67	90
3.0	0.14	187

*cf. The bricks of special shape needs mortar 7~8% from total Brick weight

Standard Anchor and Hanger

Relations Between Optimum Service Temperature and Qualities of Anchor

Max. Service Temp.(˚C)	Kinds of anchor	Max. Service Temp.(˚C)	Kinds of anchor
1,200	Hanger, Anchor Brick	800~600	18Cr~8Ni(SUS 304S)
1,100~1,000	25Cr-20Ni(SUS 310S)	600~400	13Cr
1,000~800	25Cr-12Ni(SUS 309S)	400˚C	SS

Standard Quotation Table for Monolithic Refractories for wall

Wall 1.6M×1.6M		230mm Thickness	300mm Thickness	350mm Thickness
PLASTIC, CASTABLE		0.5681m³	0.7411m³	0.8636m³
Using Anchor Bricks	1	AB11A Quantity:8ea	AB122A Quantity:8ea	AB133A Quantity:8ea
	2	AB220A Quantity:8ea	AB290A Quantity:8ea	AB340A Quantity:8ea
Using Metal Anchor	1	AS101 9ea AS111 8ea 3/8″ nut 8ea	AS101 8ea AS111 8ea 3/8″ nut 8ea	AS101 8ea AS111 8ea 3/8″ nut 8ea
	Remarks 2	AS140 8ea AS118C 8ea	AS140 8ea AS118C 8ea	AS140 8ea AS118C 8ea

Standard Quotation Table for Monolithic Refractories for roof

Roof 0.9M×0.9M		180mm Thickness	230mm Thickness	300mm Thickness
PLASTIC CASTABLE		0.1458m³	0.1863m³	0.243m³
I BEAM	HANGER Brick	AB310 Quantity: 9ea	AB320 Quantity: 9ea	AB330 Quantity: 9ea
	Auxiliary Metal anchor	AS124 Quantity: 18ea	AB124 Quantity: 18ea	AB124 Quantity: 18ea
PIPE	HANGER Brick	AB310 Quantity: 9ea	AB320 Quantity: 9ea	AB330 Quantity: 9ea
	Auxiliary Metal anchor	AS129 Quantity: 18ea	AS129 Quantity: 18ea	AS129 Quantity: 18ea
CASTABLE		0.1458m³	0.1863m³	0.243m³
Using PIPE CASTABLE Anchor Quantity		AM301 Quantity: 9ea	AM301 Quantity: 9ea	Possible to use below 1,200°C

* The above table indicates the standard qualities of our products